Speckle Structured Light Stereo Camera

User Manual

Legal Information

About this Document

The Document includes instructions for using and managing the Product. Pictures, charts, images and all other information hereinafter are for description and explanation only. The information contained in the Document is subject to change, without notice, due to firmware updates or other reasons. Please find the latest version in the company website. Unless otherwise agreed, the company makes no warranties, express or implied. Please use the Document with the guidance and assistance of professionals trained in supporting the Product.

Acknowledgment of Intellectual Property Rights

- The company owns the copyrights and/or patents related to the technology embodied in the Products described in this Document, which may include licenses obtained from third parties. Any part of the Document, including text, pictures, graphics, etc., belongs to the company. No part of this Document may be excerpted, copied, translated, or modified in whole or in part by any means without written permission.
- Trademarks and logos mentioned are the properties of their respective owners.

LEGAL DISCLAIMER

TO THE MAXIMUM EXTENT PERMITTED BY APPLICABLE LAW, THIS MANUAL AND THE PRODUCT DESCRIBED, WITH ITS HARDWARE, SOFTWARE AND FIRMWARE, ARE PROVIDED “AS IS” AND “WITH ALL FAULTS AND ERRORS”. OUR COMPANY MAKES NO WARRANTIES, EXPRESS OR IMPLIED, INCLUDING WITHOUT LIMITATION, MERCHANTABILITY, SATISFACTORY QUALITY, OR FITNESS FOR A PARTICULAR PURPOSE. THE USE OF THE PRODUCT BY YOU IS AT YOUR OWN RISK. IN NO EVENT WILL OUR COMPANY BE LIABLE TO YOU FOR ANY SPECIAL, CONSEQUENTIAL, INCIDENTAL, OR INDIRECT DAMAGES, INCLUDING, AMONG OTHERS, DAMAGES FOR LOSS OF BUSINESS PROFITS, BUSINESS INTERRUPTION, OR LOSS OF DATA, CORRUPTION OF SYSTEMS, OR LOSS OF DOCUMENTATION, WHETHER BASED ON BREACH OF CONTRACT, TORT (INCLUDING NEGLIGENCE), PRODUCT LIABILITY, OR OTHERWISE, IN CONNECTION WITH THE USE OF THE PRODUCT, EVEN IF OUR COMPANY HAS BEEN ADVISED OF THE POSSIBILITY OF SUCH DAMAGES OR LOSS.

YOU ACKNOWLEDGE THAT THE NATURE OF THE INTERNET PROVIDES FOR INHERENT SECURITY RISKS, AND OUR COMPANY SHALL NOT TAKE ANY RESPONSIBILITIES FOR ABNORMAL OPERATION, PRIVACY LEAKAGE OR OTHER DAMAGES RESULTING FROM CYBER-ATTACK, HACKER ATTACK, VIRUS INFECTION, OR OTHER INTERNET SECURITY RISKS; HOWEVER, OUR COMPANY WILL PROVIDE TIMELY TECHNICAL SUPPORT IF REQUIRED.

YOU AGREE TO USE THIS PRODUCT IN COMPLIANCE WITH ALL APPLICABLE LAWS, AND YOU ARE SOLELY RESPONSIBLE FOR ENSURING THAT YOUR USE CONFORMS TO THE APPLICABLE LAW. ESPECIALLY, YOU ARE RESPONSIBLE, FOR USING THIS PRODUCT IN A MANNER THAT DOES NOT INFRINGE ON THE RIGHTS OF THIRD PARTIES, INCLUDING WITHOUT LIMITATION, RIGHTS OF PUBLICITY, INTELLECTUAL PROPERTY RIGHTS, OR

DATA PROTECTION AND OTHER PRIVACY RIGHTS. YOU SHALL NOT USE THIS PRODUCT FOR ANY PROHIBITED END-USES, INCLUDING THE DEVELOPMENT OR PRODUCTION OF WEAPONS OF MASS DESTRUCTION, THE DEVELOPMENT OR PRODUCTION OF CHEMICAL OR BIOLOGICAL WEAPONS, ANY ACTIVITIES IN THE CONTEXT RELATED TO ANY NUCLEAR EXPLOSIVE OR UNSAFE NUCLEAR FUEL-CYCLE, OR IN SUPPORT OF HUMAN RIGHTS ABUSES.

THE PERFORMANCE DATA IN THIS PUBLICATION IS BASED ON OUR COMPANY'S INTERNAL RESEARCH/EVALUATION. ACTUAL DATA MAY VARY DEPENDING ON SPECIFIC CONFIGURATIONS AND OPERATING CONDITIONS AND OUR COMPANY SHALL NOT BEAR THE CONSEQUENCES ARISING THEREFROM.

IN THE EVENT OF ANY CONFLICTS BETWEEN THIS MANUAL AND THE APPLICABLE LAW, THE LATTER PREVAILS.

Regulatory Information

Note

These clauses apply only to the products bearing the corresponding mark or information.

EU Conformity Statement

This product and - if applicable - the supplied accessories too are marked with "CE" and comply therefore with the applicable harmonized European standards listed under the Directive 2014/30/EU(EMCD),Directive 2001/95/EC(GPSD) and Directive 2011/65/EU(RoHS).

2012/19/EU (WEEE directive): Products marked with this symbol cannot be disposed of as unsorted municipal waste in the European Union. For proper recycling, return this product to your local supplier upon the purchase of equivalent new equipment, or dispose of it at designated collection points. For more information see: http://www.recyclethis.info

Regulation (EU) 2023/1542(Battery Regulation): This product contains a battery and it is in conformity with the Regulation (EU) 2023/1542. The battery cannot be disposed of as unsorted municipal waste in the European Union. See the product documentation for specific battery information. The battery is marked with this symbol, which may include lettering to indicate cadmium (Cd), or lead (Pb). For proper recycling, return the battery to your supplier or to a designated collection point. For more information see: www.recyclethis.info.

KC Mark Certification

Class A: The device is advised to note that as a seller or a business user (Class A) Devices and intended for use outside the Home area.

A급 기기: 이 기기는 업무용(A급) 전자파적합기기로써 판매자 또는 사용자는 이 점을 주의하시기바라며, 가정 외의 지역에서 사용하는 것을 목적으로 합니다.

Symbol Conventions

The symbols that may be found in this document are defined as follows.

Symbol	Description
Danger	Indicates a hazardous situation which, if not avoided, will or could result in death or serious injury.
Caution	Indicates a potentially hazardous situation which, if not avoided, could result in equipment damage, data loss, performance degradation, or unexpected results.
Note	Provides additional information to emphasize or supplement important points of the main text.

Available Model

This manual is applicable to the Speckle Structured Light Stereo Camera.

Contents

Chapter 1 Safety Instruction 1
1.1 Safety Claim 1
1.2 Safety Instruction 1
1.3 Electromagnetic Interference Prevention 3
1.4 Laser Precaution 4
Chapter 2 Overview 5
2.1 Introduction 5
2.2 Key Features 5
2.3 Terminology 5
2.4 Operating Principle 7
2.5 Appearance 9
2.6 Power and I/O Connector 13
2.6.1 6-Pin M8 Connector 13
2.6.2 12-Pin M12 Connector 14
2.7 Indicator 15
Chapter 3 Installation 16
3.1 Installation Preparation 16
3.2 Install Device 19
Chapter 4 Device Connection 24
4.1 Install Client Software 24
4.2 Set PC Environment 25
4.2.1 Turn off Firewall 25
4.2.2 Set PC Network 26
4.3 Set Device Network 27
4.4 Connect Device to Client Software 27
Chapter 5 Quick Started with Client Software 28
5.1 Main Window Introduction 28
5.2 Device Debugging 29
5.2.1 Switch Rendering Mode 29

5.2.2 Set Algorithm-Related Parameters 34
5.2.3 Set Trigger-Related Parameters 34
5.2.4 Save Parameters 34
Chapter 6 I/O Electrical Features and Wiring 35
6.1 Input Signal 35
6.2 Output Signal 37
6.3 Input Signal Wiring 38
6.4 Output Signal Wiring 39
Chapter 7 Basic Features 41
7.1 Device Control 41
7.2 Set Working Mode 41
7.3 Set Image Mode 43
7.4 Set Pixel Format 44
7.5 Set Exposure Mode 45
7.6 Set Color Exposure Mode 46
7.7 Set Binning 47
7.8 Set Frame Rate 48
7.9 Enable Laser 49
7.10 Set Depth/RGB Align 49
7.11 Set SDK Align 50
7.12 Set JPEG Rendering 50
7.13 Set Chunk Data Control 50
7.14 Set Transport Layer Control 51
7.15 Set Communication Control 52
7.16 User Set Customization 53
7.16.1 Save User Set 53
7.16.2 Load User Set 54
7.16.3 Set User Default 54
Chapter 8 Trigger Settings 55
8.1 Set Trigger Mode 55
8.1.1 Enable Internal Trigger Mode 55
8.1.2 Enable External Trigger Mode 55

8.2 Set Trigger Source 56
8.2.1 Set and Execute Software Trigger Mode 57
8.2.2 Set and Execute Hardware Trigger Mode 57
8.3 Set Trigger Related Parameters 58
8.3.1 Set Trigger Activation 59
8.3.2 Set Trigger Delay 60
8.3.3 Set Acquisition Burst Frame Count 61
8.3.4 Set Trigger Cache 62
8.3.5 Set Trigger Debouncer 64
Chapter 9 Algorithm Parameters Settings 65
9.1 View Algorithm Status Code 65
9.2 Set Package Singulation Algorithm Parameters 65
9.3 Set Instance Segmentation Algorithm Parameters 69
9.4 Set Depth Algorithm Parameters 70
9.5 Set Package Detection Algorithm Parameters 71
9.6 Set Grasp Algorithm Parameters 72
9.7 Set Post Processing Algorithm Parameters 75
9.7.1 Set Noise Filter 75
9.7.2 Set Normal Filter 76
9.7.3 Set Extension 78
9.7.4 Set Gap Filling 79
9.7.5 Set Range Filter 81
9.7.6 Set Extraction 82
9.8 Set Range Transform Parameters 83
9.9 Set Object Classification Algorithm Parameters 84
Chapter 10 Other Functions 85
10.1 Feature Import/Export 85
10.2 File Access Control 85
10.3 Deep Learning Model Management 86
10.4 Update Firmware 87

Chapter 11 Device Application 89
Chapter 12 FAQ (Frequently Asked Question) 90
12.1 Why there is no device listed after I run the client software? 90
12.2 Why the image is very dark? 90
12.3 Why the image quality is very poor during the live view? 90
12.4 Why the posture deviation of singulation result is large? 91
12.5 Why there is no depth information in depth image? 91
12.6 What does depth mean in depth image? 91
12.7 What is the difference between exposure time and color exposure time? 92
Chapter 13 Revision History 93

Chapter 1 Safety Instruction

The safety instructions are intended to ensure that the user can use the device correctly to avoid danger or property loss. Read and follow these safety instructions before installing, operating and maintaining the device.

1.1 Safety Claim

- To ensure personal and device safety, when installing, operating, and maintaining the device, follow the signs on the device and all safety instructions described in the manual.
- The note, caution and danger items in the manual do not represent all the safety instructions that should be observed, but only serve as a supplement to all the safety instructions.
- The device should be used in an environment that meets the design specifications, otherwise it may cause malfunctions, and malfunctions or component damage caused by non-compliance with relevant regulations are not within the scope of the device's quality assurance.
- Our company will not bear any legal responsibility for personal safety accidents and property losses caused by abnormal operation of the device.

1.2 Safety Instruction

⚠**Caution**

- Do not install the device if it is found that the device and accessories are damaged, rusted, water ingress, model mismatch, missing parts, etc., when unpacking.
- Avoid storage and transportation in places such as water splashing and rain, direct sunlight, strong electric fields, strong magnetic fields, and strong vibrations.
- Avoid dropping, smashing or vigorously vibrating the device and its components.
- It is forbidden to install the indoor device in an environment where it may be exposed to water or other liquids. If the device is damp, it may cause fire and electric shock hazard.
- Place the device in a place out of direct sunlight and ventilation, away from heat sources such as heaters and radiators.
- The supplied bracket in the package is only applicable for this device, and using with other equipment may cause instability and injury.
- This is a Class A device. In the living environment, this device may cause radio interference. In this case, the user may be required to take practical measures against the interference.
- In the use of the device, you must be in strict compliance with the electrical safety regulations of the nation and region.
- Do not connect multiple devices to the same power adapter. Exceeding the adapter load

may cause a fire due to excessive heat generation.

- Use the power adapter provided by the official manufacturer. The power adapter must meet the Limited Power Source (LPS) requirements. For specific requirements, please refer to the device's technical specifications.
- Do not cover the device's plug or outlet for disconnecting power supply.
- It is strictly forbidden to wire, maintain, and disassemble the device that is powered on. Otherwise there is a danger of electric shock and a damage to device.
- Make sure that the device is installed in good condition, the wiring is firm, and the power supply meets the requirements before powering on the device.
- For a device with a power switch, please use the switch to power on and off. It is strictly forbidden to plug and unplug the power cord.
- If the device emits smoke, odor or noise, please turn off the power and unplug the power cord immediately, and contact the dealer or service center in time.
- It is strictly forbidden to touch any terminal of the device when operating it. Otherwise there is a danger of electric shock.
- It is strictly forbidden for non-professional technicians to detect signals during device operation, otherwise it may cause personal injury or device damage.
- It is strictly forbidden to maintain the device is powered on, otherwise there is a danger of electric shock.
- In order to ensure the stability of the depth data, avoid enabling the depth data measurement function of the device immediately after the installation. It is recommended to start the measurement at least one hour after the electric current is taken on the device to ensure the uniform heat diffusion of the internal device.
- Avoid aiming the image sensor at strong light in direct mode or reflection mode, such as laser beams, otherwise the image sensor will be damaged.
- Please keep the image acquisition window clean. It is recommended to wipe it with a clean cloth that is moistened with alcohol (75% or less). When the product is not in use, dust protection is required. Damage caused by improper maintenance will not be liable for warranty.
- If the device does not work properly, please contact your dealer or the nearest service center. Never attempt to disassemble the device yourself. We shall not assume any responsibility for problems caused by unauthorized repair or maintenance.
- Please dispose of the device in strict accordance with the relevant national or regional regulations and standards to avoid environmental pollution and property damage.

Note

- Check whether the device's package is in good condition, whether there is damage, intrusion, moisture, deformation, etc. before unpacking.
- Check the surface of the device and accessories for damage, rust, bumps, etc. when unpacking.
- Check whether the quantity and information of the device and accessories are complete after unpacking.
- Store and transport the device according to the storage and transport conditions of the device, and the storage temperature and humidity should meet the requirements.
- It is strictly prohibited to transport the device in combination with items that may affect

or damage the device.
- Quality requirements for installation and maintenance personnel:
  - Qualification certificate or working experience in weak current system installation and maintenance, and relevant working experience and qualifications. Besides, the personnel must possess the following knowledge and operation skills.
  - The basic knowledge and operation skills of low voltage wiring and low voltage electronic circuit connection.
  - The ability to comprehend the contents of this manual.
- Please read the manual and safety instructions carefully before installing the device.
- Please install the device strictly according to the installation method in this manual.
- Do not contact the device with strong acids, alkalis, oils, greases or organic solutions such as thinners.
- To prevent injury, the device must be securely fastened to the profile.
- Do not expose the device directly to flashlights, high-frequency switch lighting devices, or to sunlight, which may affect the performance.

1.3 Electromagnetic Interference Prevention

- Make sure that the shielding layer of cables is intact and 360° connected to the metal connector when using shielded cables.
- Do not route the device together with other equipment (especially servo motors, high-power devices, etc.), and control the distance between cables to more than 10 cm. Make sure to shield the cables if unavoidable.
- The control cable of the device and the power cable of the industrial light source must be wired separately to avoid bundled wiring.
- The power cable, data cable, signal cable, etc. of the device must be wired separately. Make sure to ground them if the wiring groove is used to separate the wiring and the wiring groove is metal.
- During the wiring process, evaluate the wiring space reasonably, and do not pull the cables hard, so as not to damage the electrical performance of the cables.
- If the device is powered on and off frequently, it is necessary to strengthen the voltage isolation, and consider adding a DC/DC isolation power supply module between the device and the adapter.
- Use the power adapter to supply power to the device separately. If centralized power supply is necessary, make sure to use a DC filter to filter the power supply of the device separately before use.
- The unused cables of the device must be insulated.
- When installing the device, if you cannot ensure that the device itself and all equipment connected to the device are well grounded, you should isolate the device with an insulating bracket.
- To avoid the accumulation of static electricity, ensure that other equipment (such as machines, internal components, etc.) and metal brackets on site are properly grounded.
- During the installation and use of the device, high voltage leakage must be avoided.
- Use a figure-eight bundle method if the device cable is too long.

- When connecting the device and metal accessories, they must be connected firmly to maintain good conductivity.
- Use a shielded network cable to connect to the device. If you use a self-made network cable, make sure that the shielding shell at the aviation head is well connected to the aluminum foil or metal braid of the shielding cable.

1.4 Laser Precaution

The device complies with IEC 60825-1:2014, and its laser safety class belongs to laser 1.

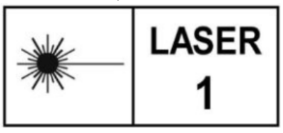

Figure 1-1 Class 1 Laser Product

⚠**Caution**

- Do not look directly at the laser beam, and if necessary, adjust the direction of direct eye gaze or close your eyes for protection.
- Do not use optical instruments (such as telescopes, magnifier) to observe the laser beam.
- Do not place optical instruments (such as mirrors) within the irradiation range of the laser beam.
- Avoid shining the laser on highly reflective materials. If it is unavoidable, the angle of the reflective material should be adjusted to prevent damage caused by laser reflection.
- Turn off the laser when the device is not in use.
- Please use this device correctly and safely in accordance with the contents of this manual and the local standards and laws and regulations. Otherwise the operator may be exposed to the risk of injury, electric shock, or radiation from the laser.

Chapter 2 Overview

2.1 Introduction

The speckle structured light stereo camera adopts active and binocular 3D imaging technology to obtain the depth information of the measured object in the depth image mode. Through the depth information and the 2D information of the measured object obtained by the color camera inside the device, you can get the three-dimensional information of the measured object.
At the same time, the device can accurately locate the measured object via its built-in deep learning algorithm and calculation results of instance segmentation and point cloud segmentation.

2.2 Key Features

- Built-in deep learning algorithm, instance segmentation and point cloud segmentation to accurately locate the measured object.
- High-efficient laser module and accurate exposure synchronization provide stable performance and wider dynamic range.
- Supports synchronized output of RGB images and depth images for secondary development.
- Adopts narrow band filters to have stronger anti-interference ability.
- Supports one-click system calibration of single camera or multiple cameras.
- Ingress Protection (IP) 65.

Note

- The specific functions may differ by device models.
- Refer to the device's specifications for specific parameters.

2.3 Terminology

The terminologies in this user manual are shown in the table below.

Note

- The images below are for reference only.
- The location of the mono image sensor or color image sensor may differ by device models.

Table 2-1 Terminologies

Terminology	Definition	Image
DOE	The DOE (Diffractive Optical Element) utilizes the principle of light diffraction to enable laser beams to form spots in specific directions.	--
Depth Image	The depth map is a 2D image that samples the surface of a target object along the X-axis and Y-axis, and shows object information in gray or color in Z-axis. Taking the workpiece in the right figure as an example, the left side is a color image, and the right side displays a pseudocolor-rendered depth image. Different colors in the image represent the distance of each point from the camera.	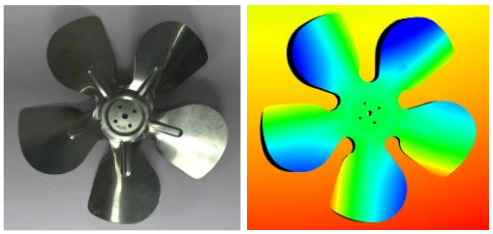
Point Cloud	The point cloud is a 3D image represented as a set of discrete points in 3D space. Each point contains its spatial coordinates (X/Y/Z). Taking the workpiece in the right figure as an example, the point cloud can reconstruct a 3D model of the object.	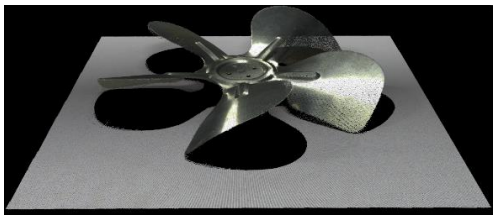
IR Image	The IR image (infrared image) is generated by capturing the infrared radiation emitted from a target object via an IR camera. It obtains depth information in 3D reconstruction and enhances the robustness of image processing.	--

RGBD Alignment	Align pixel spatial positions of depth image and color image to generate an RGB-D image with the same resolution as the color image. After alignment, the depth value corresponding to each color pixel can be used for 3D coordinate calculation, achieving correspondence between color data and 3D information.	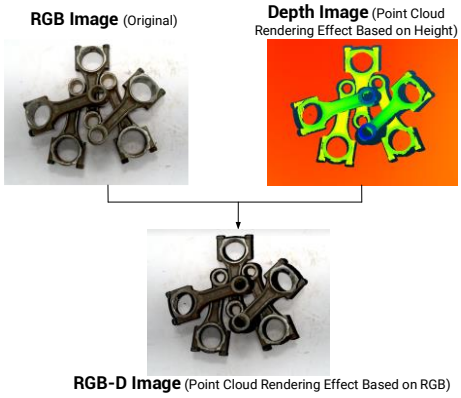
Measurement Range (MR)	It refers to the valid range for device measurement. **Note** If the object is out of the measurement range, no valid data will be obtained.	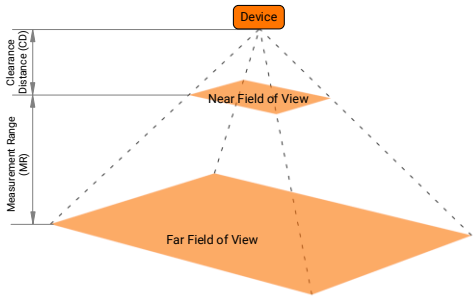
Clearance Distance (CD)	It refers to the shortest distance between the device and the object in the measurement range. **Note** If the distance between the device and the object is less than the clearance distance, no valid data will be obtained.	
Near Field of View	It refer to the viewable area close to the device.	
Far Field of View	It refer to the viewable area far from the device.	
X-Axis/Y-Axis/Z-Axis	They are coordinate axis on the three-dimensional coordinates. The origin of the coordinate system is the center of the lens.	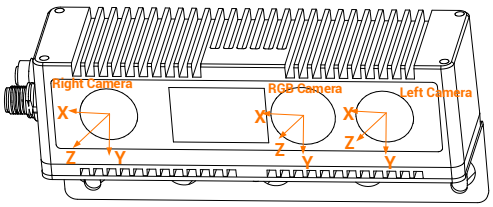

2.4 Operating Principle

The speckle structured light stereo camera consists of DOE laser module, two 2D mono

cameras, and one 2D color camera. The workflow is shown in the figure below.

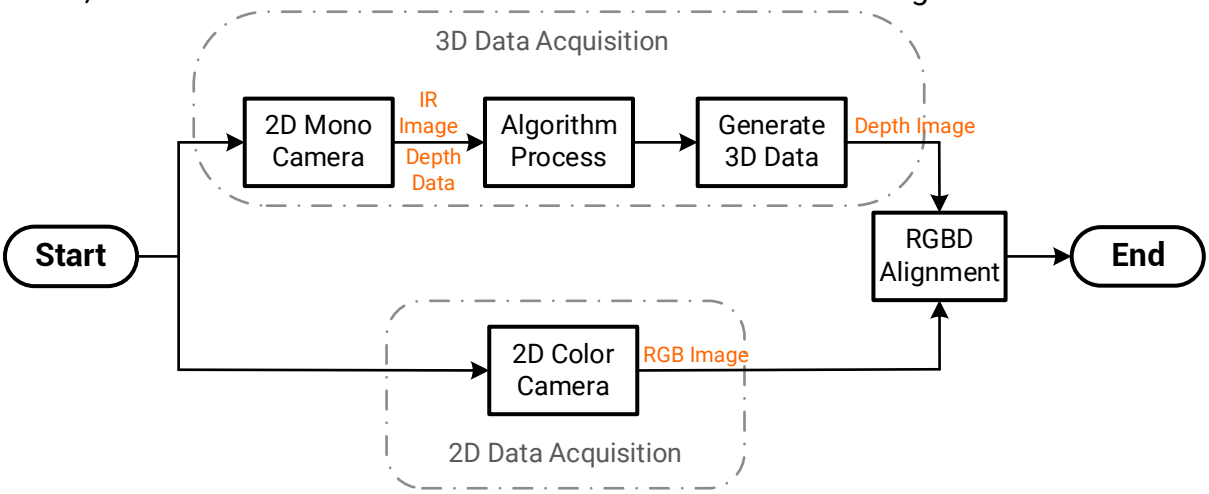

Figure 2-1 Workflow

3D Data Acquisition

1. After passing through a DOE, the laser projects randomly-distributed speckle patterns on the surface of the object. Due to the height and shape of the object, the speckle patterns become distorted.
2. The two 2D mono cameras capture the distorted speckle patterns, calculate the depth data of the object surface through internal processing, and output an IR image.
3. The depth data is processed by internal algorithm to generate a depth image and point cloud.

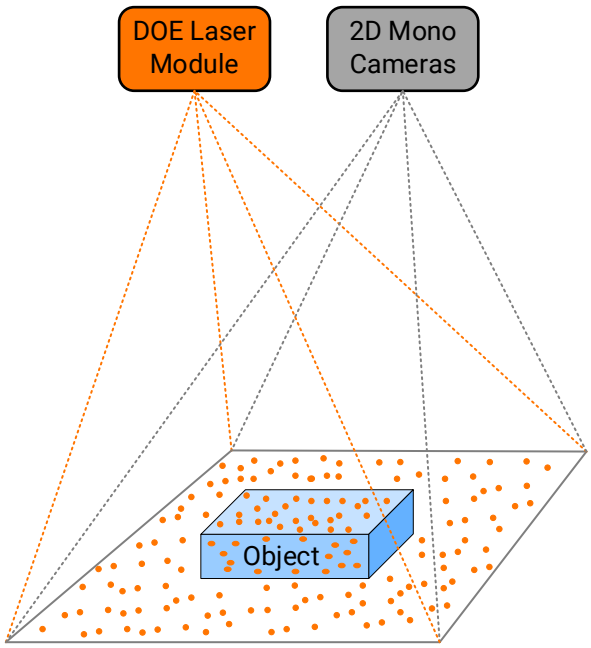

Figure 2-2 3D Data Acquisition

2D Data Acquisition

The 2D color camera captures a 2D image of the object when the laser module does not project speckle patterns, outputs an RGB image, and acquires the surface color and texture information of the object.

RGBD Alignment

The pixel alignment output of RGB image and depth image can be achieved via the client software, which fuses 3D structural information with visual features such as object surface colors and textures, showing a rich and complete scene.

2.5 Appearance

Note

- For specific appearance and dimension, please refer to the device's datasheet for details.
- The appearance is subject to change, and the actual device you purchased shall prevail.
- The location of the component 1, 2, or 3 may differ by device models.

Refer to the table below for the relation between device model and device appearance type.

Table 2-2 Device Model and Device Type

Device Type	Device Model
Type I Device	MV-DB500S-C MV-DB500S-R MV-DB500S-S MV-DB500S-V
Type II Device	MV-DB300S-V MV-DB05SME
Type III Device	MV-DB12SME MV-DB500S MV-DB500S-C V3.0 MV-DB700S-C V3.0 MV-DB500S-S V3.0 MV-DB700S-S V3.0
Type IV Device	MV-DB1300A V2.0

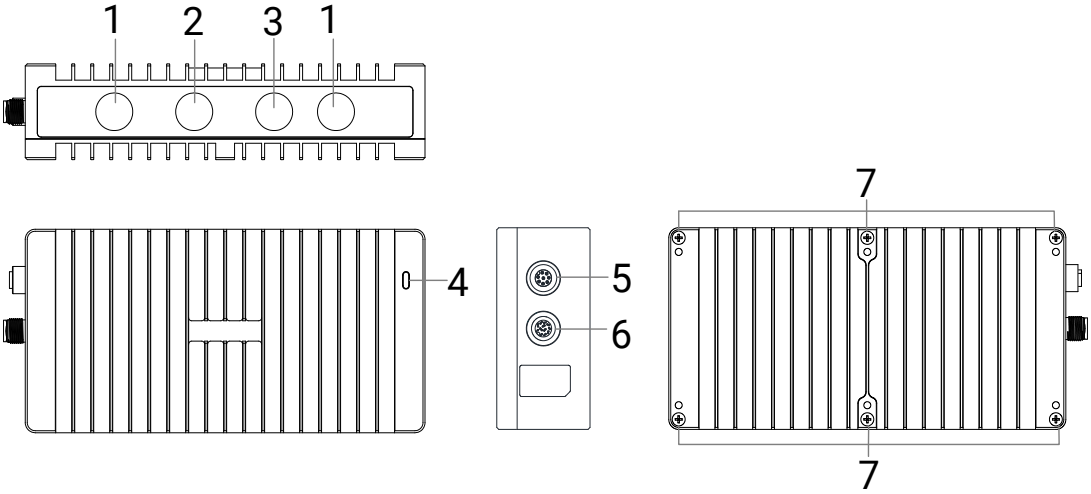

Figure 2-3 Appearance of Type I Device

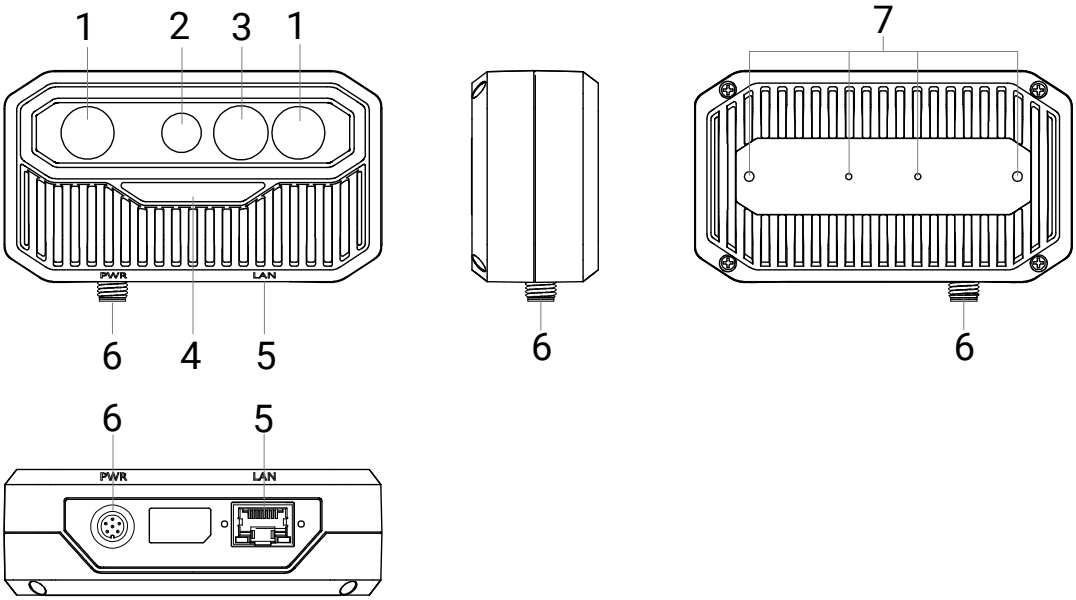

Figure 2-4 Appearance of Type II Device

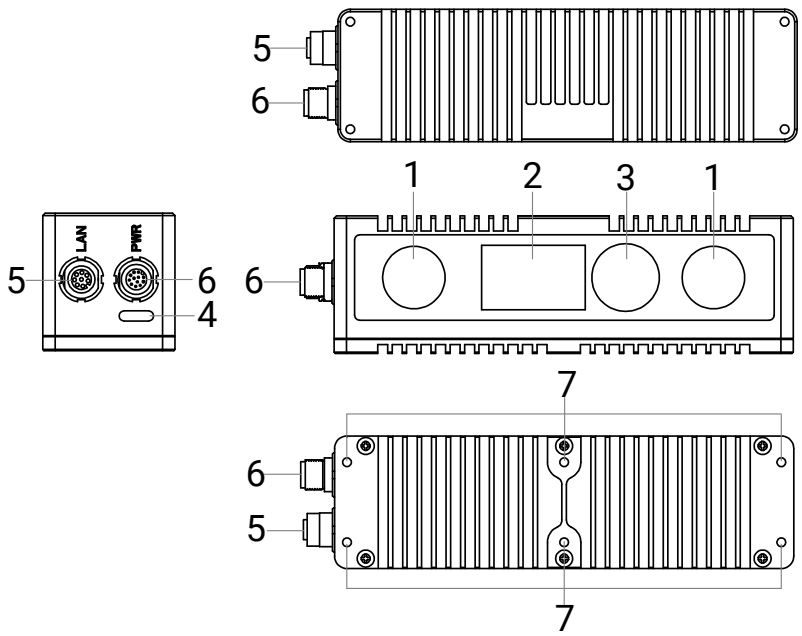

Figure 2-5 Appearance of Type III Device

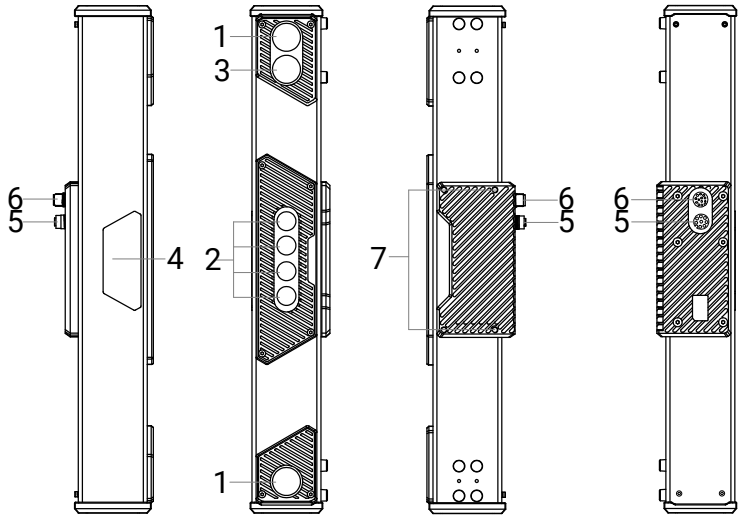

Figure 2-6 Appearance of Type IV Device

Table 2-3 Component Description

No.	Name	Description
1	Mono Image Sensor	It gets images of the measured object for calculating depth information.
2	Laser Module	It projects speckle patterns to the measured object for measurement. Laser module for some device models is VCSEL. For

		specific information, the actual device shall prevail.
3	Color Image Sensor	It gets RGB images of the measured object for instance segmentation.
4	LED Indicator	It displays the device's operation status. Refer to section ***Indicator*** for details.
5	Gigabit Ethernet Interface	It is a gigabit Ethernet interface for transmitting data. ● For type I/type III/type IV device, the interface is designed with threads to tighten connection between the device and network cable. ● For type II device, the interface has two screw holes on either side to fix the network cable, avoiding abnormal image acquisition caused by interface loosening.
6	Connector	It provides power, I/O, and serial port. ● For type I/type III/type IV device, it has a 12-pin M12 connector which is designed with threads. Before connection, you should tighten it. ● For type II device, it has a 6-pin M8 connector. When connecting, align the connector and tighten it.
7	Screw Hole	Screw holes on the bottom of the device are used to fix the device. ● For type I and type III device, it is fixed with the bracket via M4x5 screws by default. It is recommended to use M6T bolts to fix the bracket to other structures. ● For type II device, it is shipped without a bracket. Use the M3 screws to fix the device to the bracket, and then mount to other structures. ● For type IV device, it is fixed with the bracket via M6 screws by default. It is recommended to use M6T bolts to fix the bracket to other structures.
8	Mounting Hole	There are two φ5 mounting holes on the bottom of the device for installation.

2.6 Power and I/O Connector

There are two connectors for different device models to provide power, I/O, and serial port: a 6-pin M8 connector and a 12-pin M12 connector. Refer to the table below to get the details.

Table 2-4 Component Description

Connector	Device Model
6-Pin M8 connector	Type II device
12-Pin M12 connector	Type I/III/IV devices

2.6.1 6-Pin M8 Connector

Refer to the figure and table below to get pin definitions.

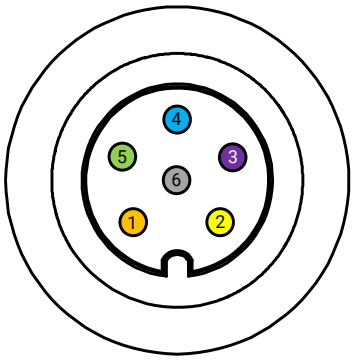

Figure 2-7 6-Pin M8 Connector

Table 2-5 Pin Definitions

Pin No.	Supplied Cable Color	Signal	I/O Signal Source	Description
1	Orange	DC_PWR	--	Power supply
2	Yellow	OPTO_IN	Line 0+	Opto-isolated input
3	Purple	GPIO	Line 2+	I/O input
4	Blue	OPTO_OUT	Line 1+	Opto-isolated output
5	Green	OPTO_GND	Line 0-/1-	Opto-isolated signal ground
6	Gray	GND	Line 2-	Power supply ground / non-isolated ground

Note

- Refer to the table above and the label attached to the supplied power and I/O cable to wire the device.

- The table above is applicable to the supplied 6-pin M8 cable included in the package.
- For unused suspended cables during wiring, please handle them properly:
  - For cables with heat-shrink sleeve, do not remove the sleeve if unused.
  - For cables without heat-shrink sleeve, it is recommended to cut the unused cables to expose the conductors.

2.6.2 12-Pin M12 Connector

The device has a 12-pin M12 connector that provides power, I/O, and serial port. Refer to the figure and table below to get pin definitions.

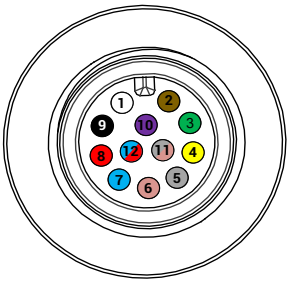

Figure 2-8 12-Pin M12 Connector

Table 2-6 Pin Definitions

Pin No.	Supplied Cable Color	Signal	I/O Signal Source	Description
1	White	POWER_IN	--	Power supply
2	Brown	GND	--	Power supply ground
3	Green	I_OUT1	Line 1+	I/O isolated output 1
4	Yellow	I_OUT4	Line 4+	I/O isolated output 4
5	Gray	I_OUT7	Line 7+	I/O isolated output 7
6	Pink	OUT_COM	Line 1/4/7-	Output signal ground
7	Blue	I_IN0	Line 0+	I/O isolated input 0
8	Red	I_IN3	Line 3+	I/O isolated input 3
9	Black	I_IN6	Line 6+	I/O isolated input 6
10	Purple	IN_COM	Line 0/3/6-	Input signal ground
11	Gray/Pink	232_RXD	--	RS-232 serial port input
12	Red/Blue	232_TXD	--	RS-232 serial port output

Note

- Refer to the table above and the label attached to the supplied power and I/O cable to wire the device.
- The table above is applicable to the supplied 12-pin M12 cable included in the package.
- For unused suspended cables during wiring, please handle them properly:
  - For cables with heat-shrink sleeve, do not remove the sleeve if unused.
  - For cables without heat-shrink sleeve, it is recommended to cut the unused cables to expose the conductors.

2.7 Indicator

The device's indicator is used to indicate the operation status of the device.

Note

- The indicator status may differ by device models, and the actual device you purchased shall prevail.
- When the indicator is lit up, flashing rapidly, flashing slowly, or flashing very slowly, its unlit interval is 5 sec, 0.2 sec, 1 sec, and 2 sec respectively.

Table 2-7 Indicator Description

No.	Indicator Color	Status	Device Status
1	Blue	Rapid Flashing	The device is streaming in an internal triggering mode.
2	Blue	Slow Flashing	The device is streaming in an external triggering mode.
3	Blue	Solid	● The device operates normally. ● The device's firmware is updated.
4	Red and Blue	Slow Flashing Alternately	The device's firmware is updating.
5	Red and Blue	Rapid Flashing Alternately	The device executes the command of Find Me.
6	Red	Very Slow Flashing	● The device's IP conflicts. ● The device's network is not connected.
7	Red	Solid	● Updating firmware fails. ● A fatal exception occurs. ● Other errors occur.

Chapter 3 Installation

3.1 Installation Preparation

You need to prepare following accessories before installation.

Table 3-1 Accessories

No.	Name	Quantity	Description
1	Power and I/O cable	1	● For type II device, it refers to the supplied 3-meter cable with 6-pin M8 connector and open end. ● For other device models, it refers to the supplied 5/7/10-meter cable with 12-pin M12 connector and open end.
2	Network Cable	1	● For type II device, it refers to the RJ45 network cable, and its connector is RJ45 (with screws) to RJ45 standardized connector. You need to purchase separately. ● For type I and type III devices, it refers to the supplied 7-meter M12 to RJ45 network cable. ● For type IV device, it refers to the M12 to RJ45 network cable. You should purchase separately.
3	Power Supply	1	● For type II and type IV devices, you need to purchase 12 V 2 A above or 24 V 1 A above power adapter or switching power supply. ● For other device models, it refers to the supplied DC switch power supply, or you can purchase separately according to the values of power supply and power consumption in the datasheet.
4	Bracket	1	It refers to the bracket for fixing the device. ● For type I and type III devices, the bracket is installed on the device by default. ● For type II and type IV devices, you should install the bracket first.
5	Screws	Several	● For type II device, they are the supplied M3 screws for fixing the bracket. ● For other device models, they are the supplied M6T bolts for fixing the bracket.

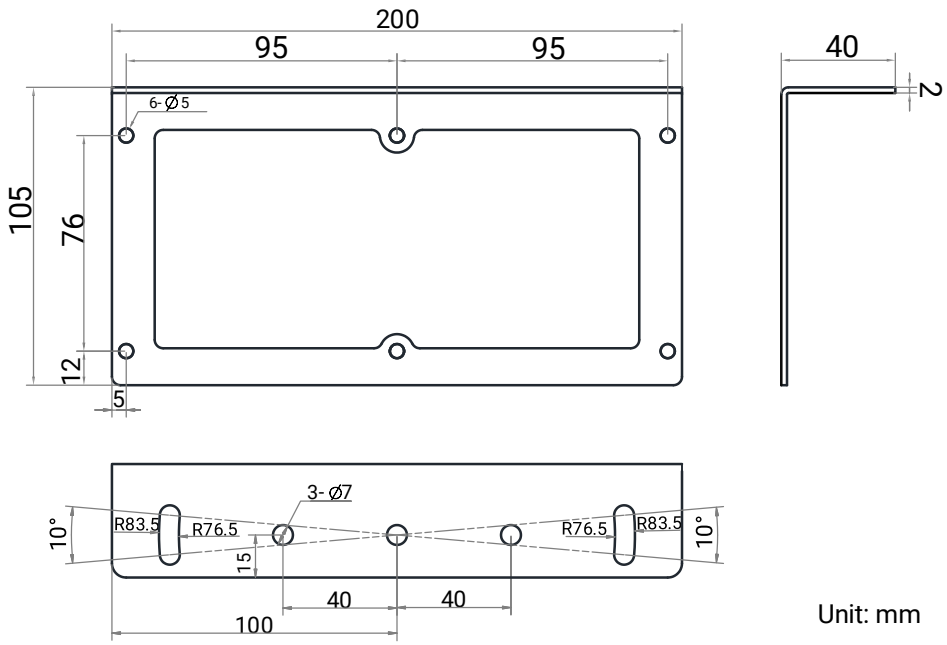

Figure 3-1 Bracket Dimensions for Type I Device

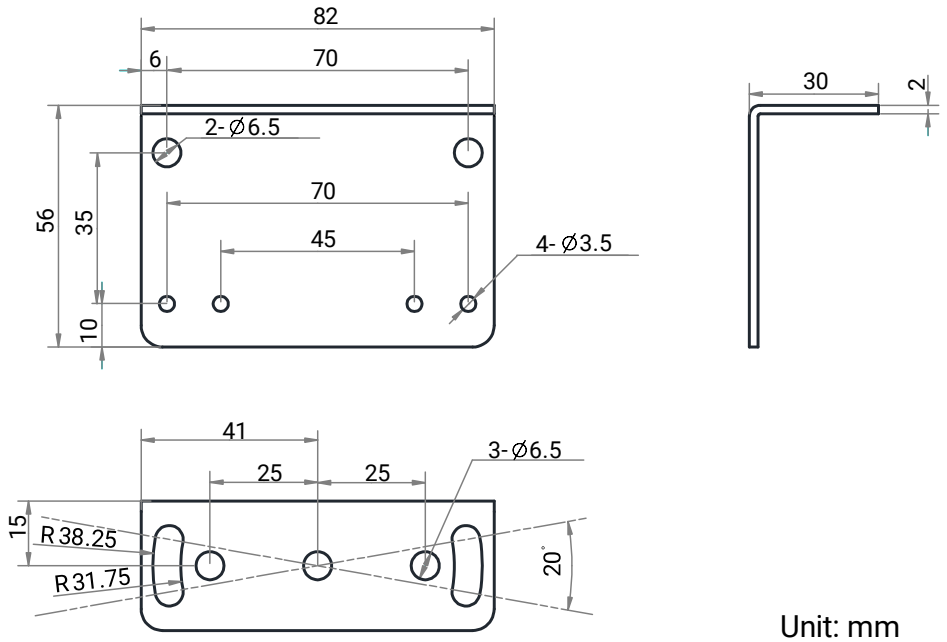

Figure 3-2 Bracket Dimensions for Type II Device

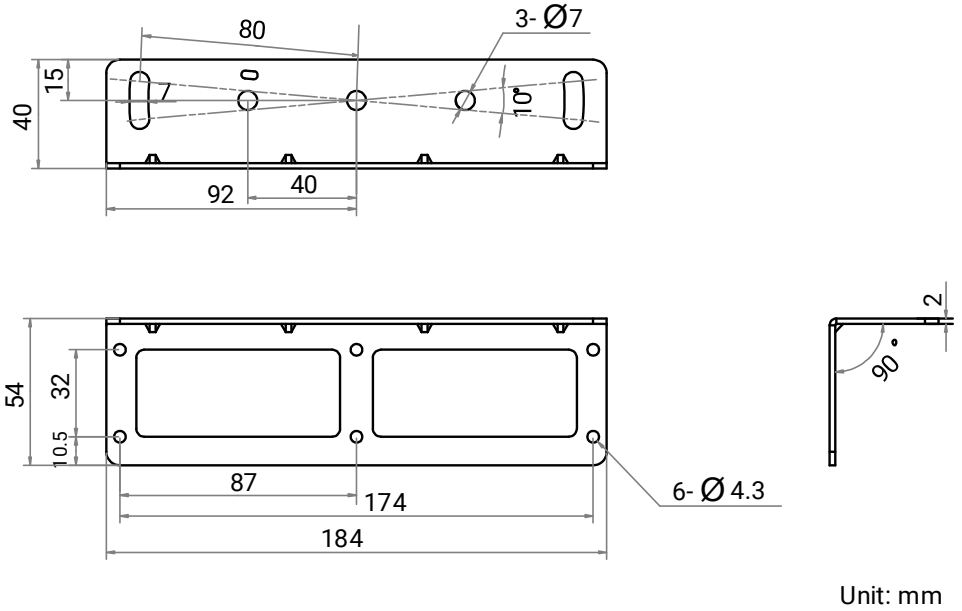

Figure 3-3 Bracket Dimensions for Type III Device

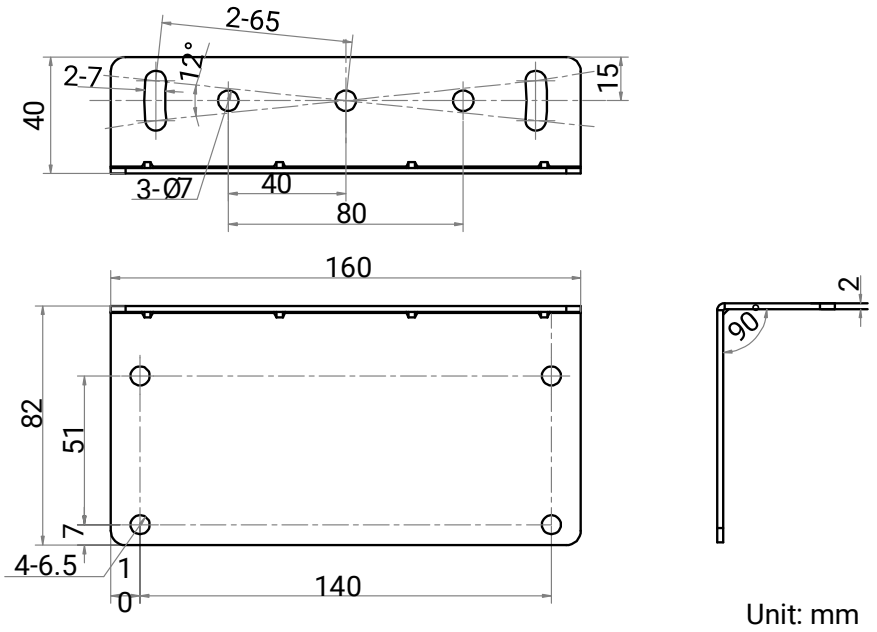

Figure 3-4 Bracket Dimensions for Type IV Device

Caution

- Before any installation or maintenance work, please disconnect the power supply from the utility, and ensure that it will not be reconnected inadvertently.
- Do not install the power supply in places with high moisture or near the water.
- Do not install the power supply in places with high ambient temperature or near fire source.

- Please install the exposed high-voltage terminals on the power supply in a closed chassis or cabinet to prevent accidental contact.
- Keep enough insulation distance between mounting screws and internal components of power supply.
- Fans and ventilation holes must be kept free from any obstructions. Also a 10 cm to 15 cm clearance should be kept when the adjacent device is a heat source.
- The power supply must be grounded as required.
- Output current and output power must not exceed the rated values on specifications.
- Non-standard mounting or operating under high ambient temperature may increase the internal component temperature and will decrease the output power.
- All failure should be examined by a qualified technician. Do not remove the case of the power supply by yourself.
- Do not touch the power terminal for 5 minutes after the power is turned off, that may cause electric shock.

3.2 Install Device

Before You Start

- Make sure that the device in the package is in good condition and all assembly parts are included.
- Make sure that all related equipment is powered off during the installation.
- Make sure that the device is fixed with the bracket.

Steps

1. (Optional) Fix the device to the bracket.

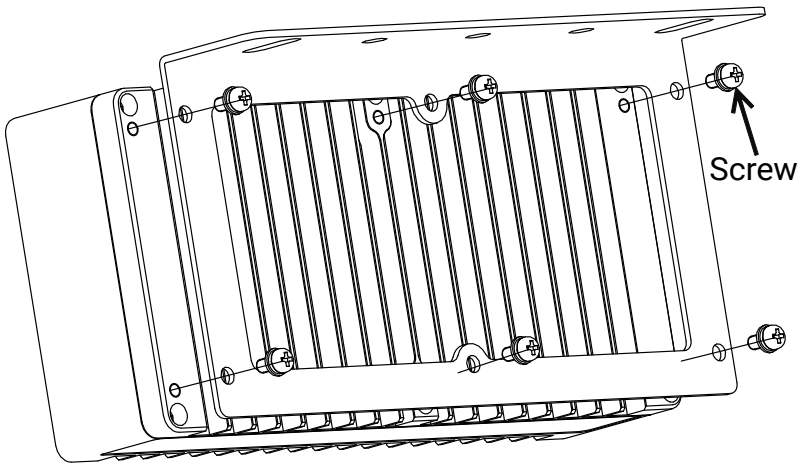

Figure 3-5 Bracket Fixing (Type I Device)

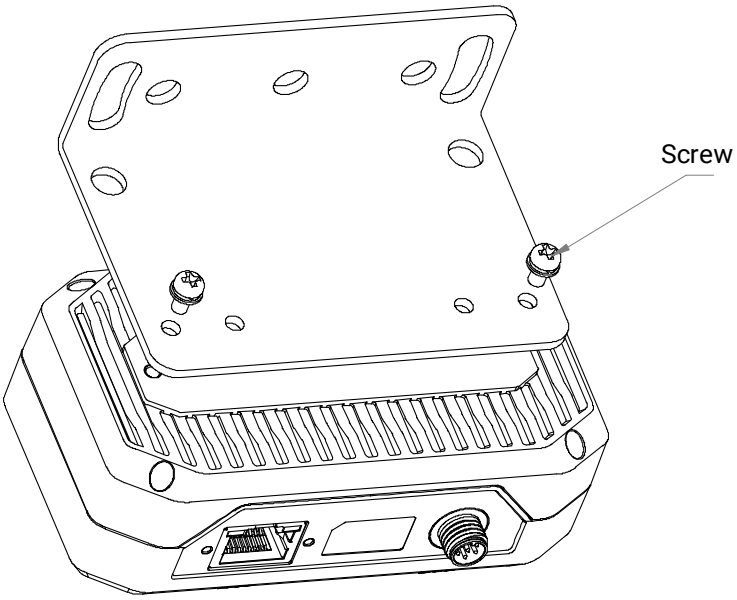

Figure 3-6 Bracket Fixing (Type II Device)

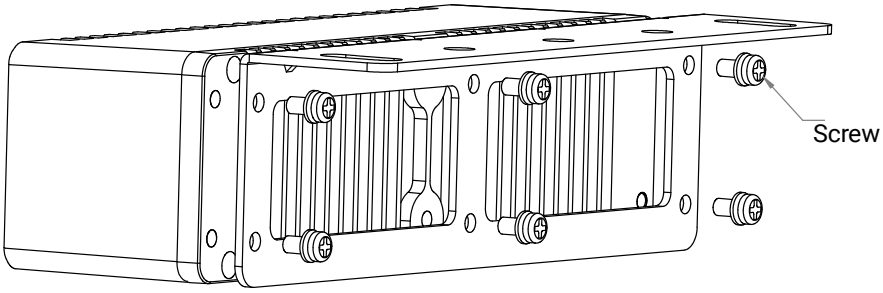

Figure 3-7 Bracket Fixing (Type III Device)

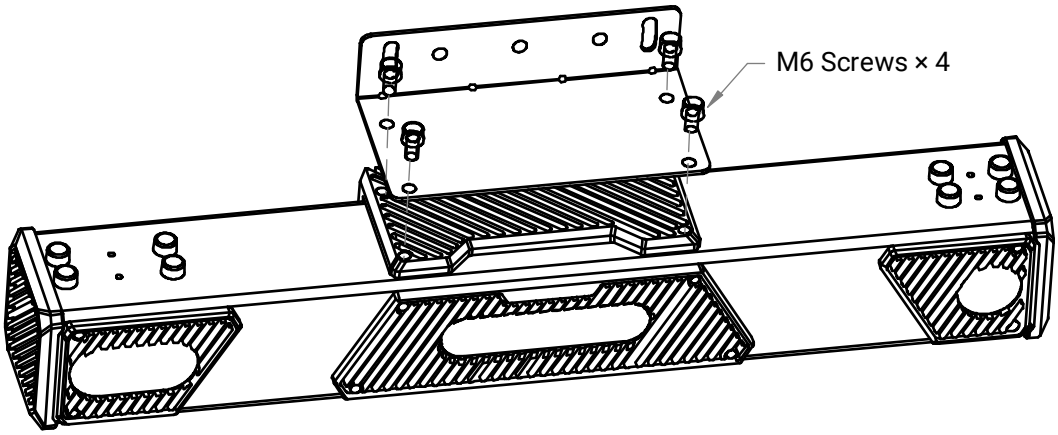

Figure 3-8 Bracket Fixing (Type IV Device)

2. Fix the bracket to the installation structure.

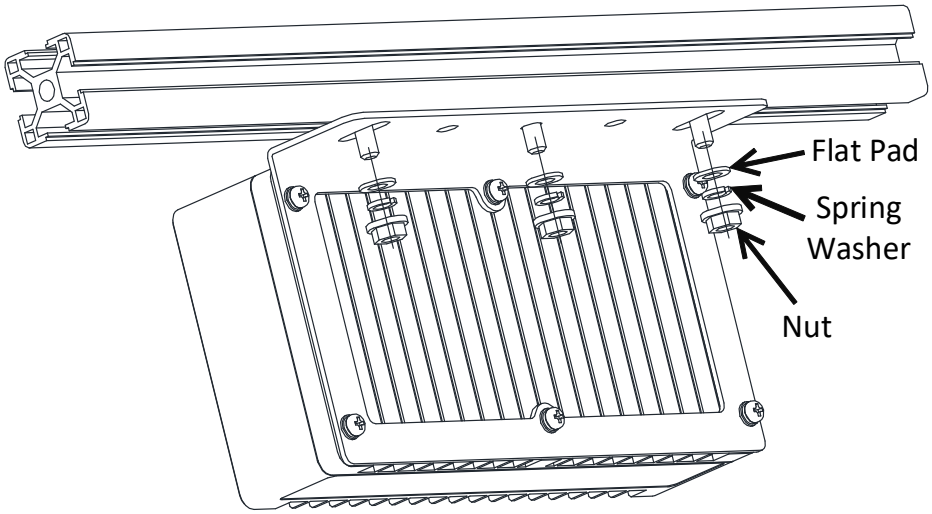

Figure 3-9 Fix to Installation Structure (Type I Device)

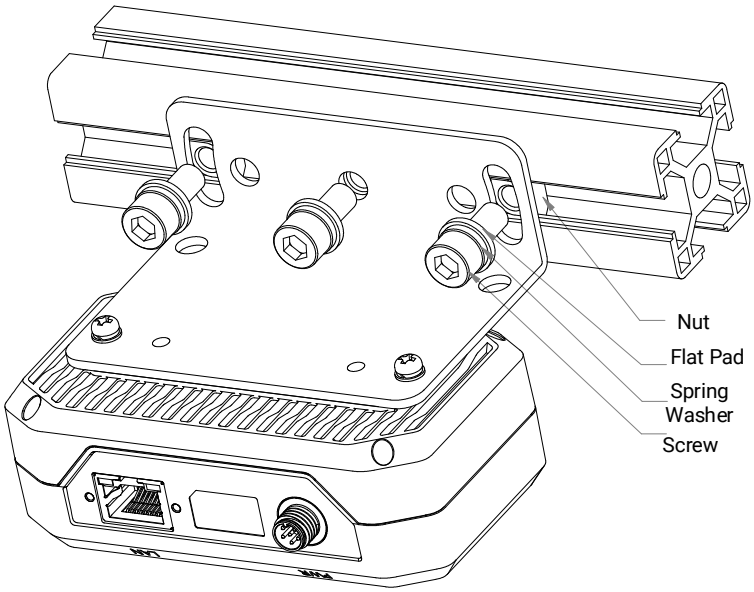

Figure 3-10 Fix to Side of Installation Structure (Type II Device)

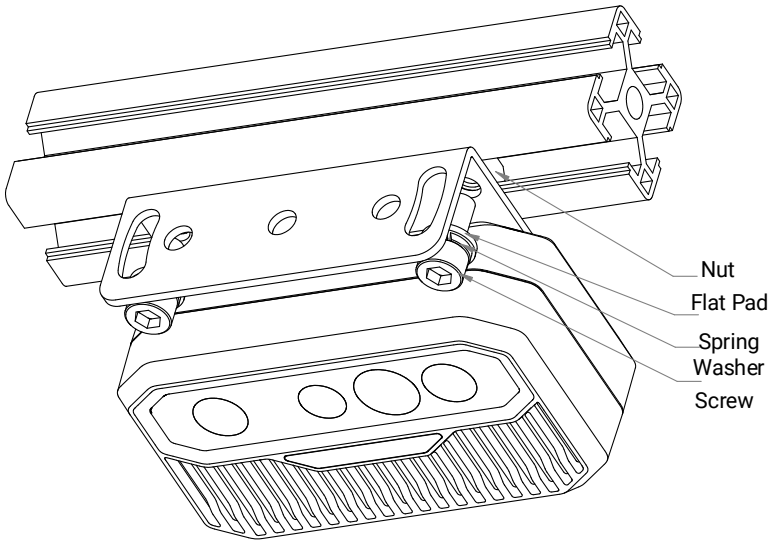

Figure 3-11 Fix to Bottom of Installation Structure (Type II Device)

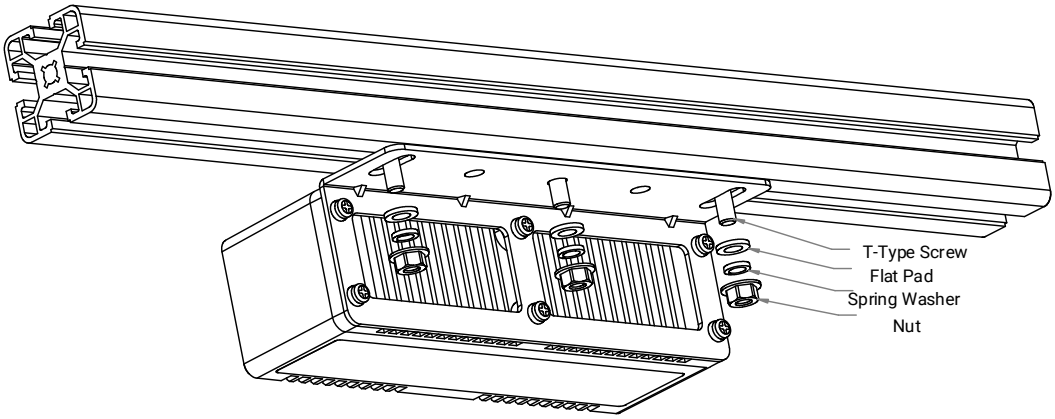

Figure 3-12 Fix to Installation Structure (Type III Device)

Note

For type III device, you can fix the bracket to the top or bottom of the installation structure. If the size of the installation structure is too large, it is recommended to fix the bracket to the bottom of the installation structure.

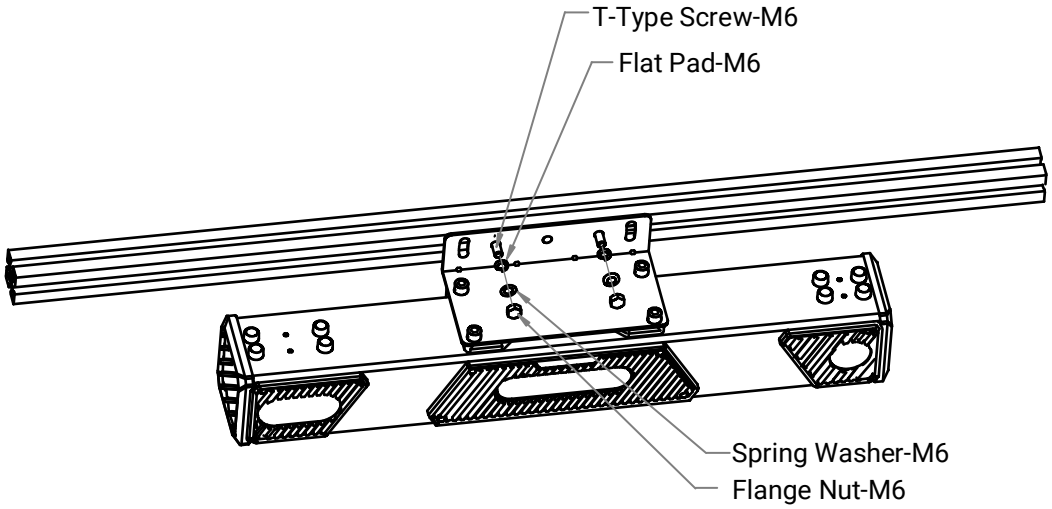

Figure 3-13 Fix to Installation Structure (Type IV Device)

3. Use the network cable to connect the device to a switch or NIC.
4. Use the power and I/O cable to connect the device to a suitable switch power supply. Refer to section ***Power and I/O Connector*** for details.

Chapter 4 Device Connection

4.1 Install Client Software

HiViewer (hereinafter referred to as the "client software") is a software application developed specifically for the device. The client software supports live view, parameter configuration, data saving, firmware upgrade and other functions, and you can choose among various rendering modes for viewing live images, such as RGB image, IR image, depth image, and point cloud image.

Steps

Note

- The client software is compatible with 32/64-bit Windows 7/10, and 64-bit Windows 11.
- You can contact technical support to get the installation package of the client software.
- The graphic user interface may differ by different versions of client software you use.

1. Double click the installation package to start installing the client software.
2. Select the language on the upper-left corner.

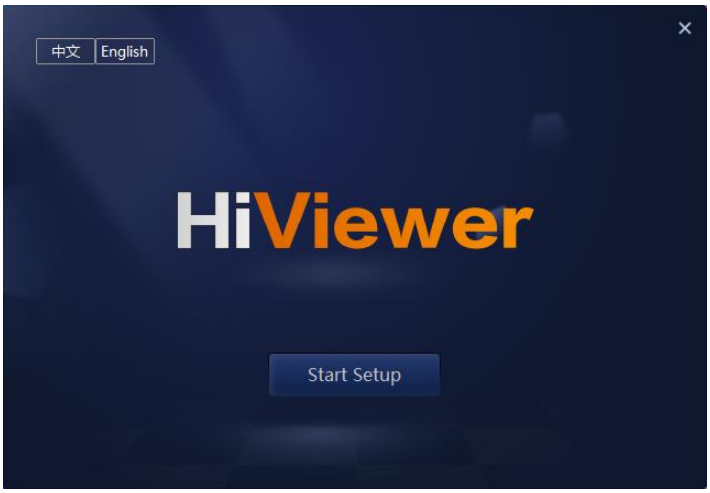

Figure 4-1 Installation Window

3. Click **Start Setup**.
4. Check **I accept** and click **Next**.
5. Select installation directory and select driver, and click **Next**.

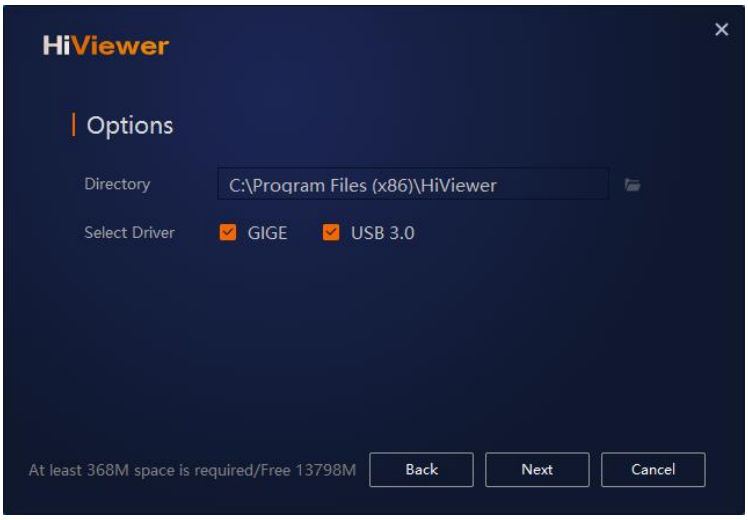

Figure 4-2 Select Directory and Driver

6. Finish the installation according to the interface prompts.

4.2 Set PC Environment

To ensure stable client running and data transmission, you are recommended to set PC environment.

4.2.1 Turn off Firewall

Steps

Note

For different Windows versions, the path name or interface may differ. Please refer to the actual condition.

1. Go to Windows Firewall.
- Windows 7 system: Click **Start** → **Control Panel** → **Windows Firewall**.
- Windows 10 system: Click **Start** → **Control Panel** → **System and Security** → **Windows Defender Firewall**.
- Windows 11 system: Click **Start** → **Settings** → **Privacy & security** → **Windows Security** → **Firewall & network protection**.
2. For Windows 7 and 10 system, click **Turn Windows Defender Firewall on or off** on the left. For Windows 11, select the network and turn off in **Microsoft Defender Firewall**.
3. Select **Turn off Windows Defender Firewall (not recommended)**.

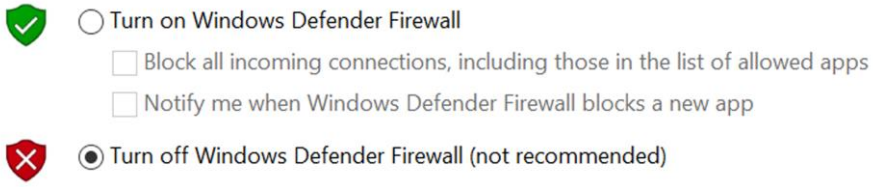

Figure 4-3 Windows Defender Firewall

4. Click **OK**.

4.2.2 Set PC Network

To ensure stable image transmission and normal communication between the PC and the device via client software, you need to set the PC network before using the client software.

Steps

Note

For different Windows versions, the path name or interface may differ. Please refer to the actual condition.

1. Go to PC network settings page: **Start** → **Control Panel** → **Network and Internet** → **Network and Sharing Center** → **Change adapter settings**.
2. Select NIC and set the IP obtainment mode.
- Select **Obtain an IP address automatically** to get an IP address of the PC automatically.
- Select **Use the following IP address** to set an IP address for the PC manually.

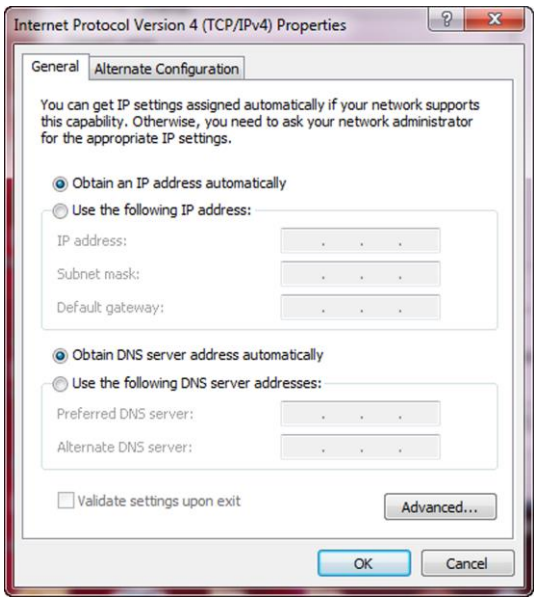

Figure 4-4 Set PC Network

3. Set NIC property.

1) Go to NIC settings page: **Control Panel** → **Hardware and Sound** → **Device Manager** → **Network Adapter**.
2) Select corresponding network interface card, and click **Advanced**.
3) Set **Receive Buffers** and **Jumbo Packet** to its max. value.

4.3 Set Device Network

You can configure the IP address of the selected camera.

Steps

1. Double click the client software to run it, and the **Device List** window will pop up.
2. Select a device, and the basic information will be shown on the right.
3. Right-click the device and click **Modify IP** to open the **Modify IP Address** window, or click to open the **Modify IP Address** window.
4. Set the IP address of the device in the same network segment with the PC.

Note

It is recommended to set the IP address as the static IP for device's stable operating.

Figure 4-5 Modify Device's IP Address

4.4 Connect Device to Client Software

Make sure that the device's IP address is in the same network segment with the PC where you installed the client software before connecting the device to it.

Double click the device name in device list, or click to connect the device to the client.

Chapter 5 Quick Started with Client Software

5.1 Main Window Introduction

After connecting a camera to the Software, you will enter the main window.

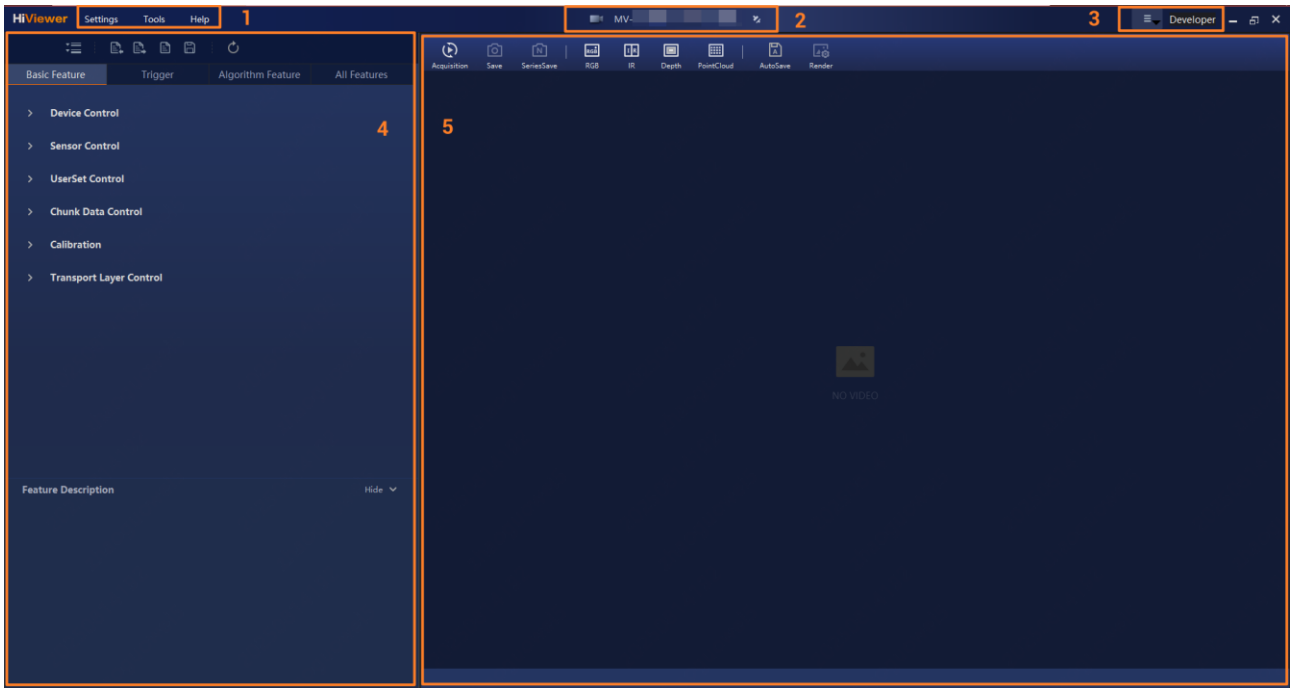

Figure 5-1 Main Window

Note

- For specific main window of the client software, refer to the actual one you got.
- Refer to the user manual of the client software for detailed operations.

The following table shows the description of each area of the main window.

Table 5-1 Main Window Introduction

No.	Area Name	Description
1	Menu Bar	Function modules including **Settings**, **Tools**, and **Help**.
2	Camera Management	Display camera model and serial No. You can click to disconnect the camera and go back to the initial page. Then you can click **Open Device List** in the middle to manage cameras on the device list, or double click **Quick Connect** to quickly connect to the current camera.

No.	Area Name	Description
3	Management Mode	Switch management modes among **Standard**, **Smart**, and **Developer**. ● **Standard**: For standard camera to perform common acquisition. It is the default mode after launching the Software. ● **Smart**: For smart camera solution, with additional access to setting algorithm feature and Chunk. ● **Developer**: For high-end troubleshooting by developers, with access to high-end parameters and all the other parameters in Standard and Smart mode. **Note** The functions introduced in this manual is under **Smart** mode.
4	Feature Panel	Configure and manage camera features, import/export features, and save/load features.
5	Display Window	View the images of the connected camera, switch image modes, and capture image, etc.

Note

If a prompt of network speed lowers than 1 Gbps is displayed when the camera is connected to the HiViewer, check whether the network environment is Gigabit Ethernet. To do this, go to **Network and Internet** → **Network and Sharing Center** → **Change Adapter Settings**, and double click the corresponding NIC to see if the network speed is 1 Gbps.

5.2 Device Debugging

The overall workflow of debugging device is shown below.

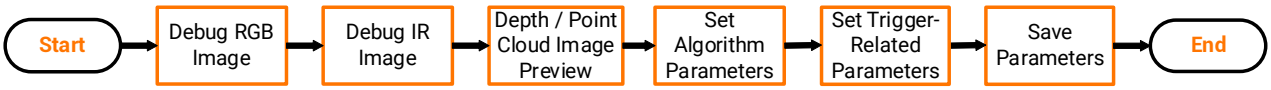

Figure 5-2 Overall Workflow

5.2.1 Switch Rendering Mode

The client software supports multiple rendering modes for viewing live images acquired by a camera, such as RGB image, IR image, depth image, and point cloud image. You can switch among different rendering modes via the top bar of the live view window.

RGB Image

Steps

1. Click to start acquisition.
2. On the top bar of the live view window, click to view live images in RGB image mode.

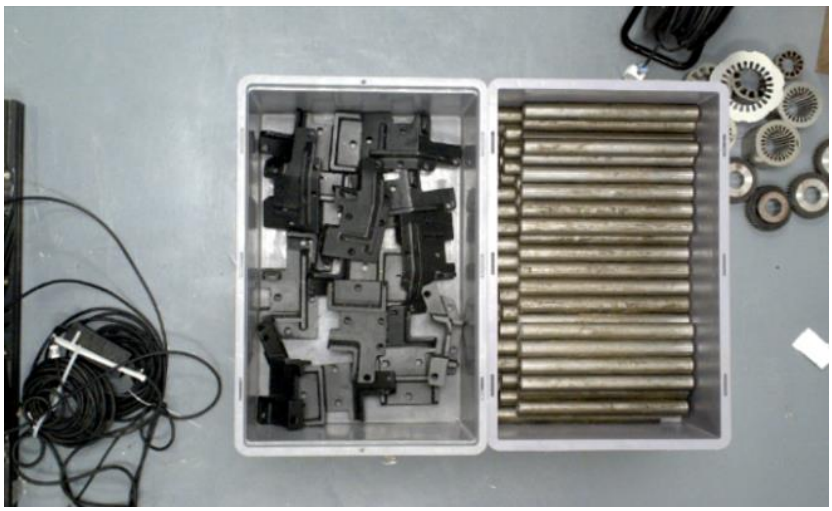

Figure 5-3 Live View in RGB Image Mode

3. Go to **Basic Feature** → **Sensor Control** to set related parameters to adjust brightness and contrast of color image, such as **Color Exposure Time**, **Color Gain**, and **Color Gamma**.

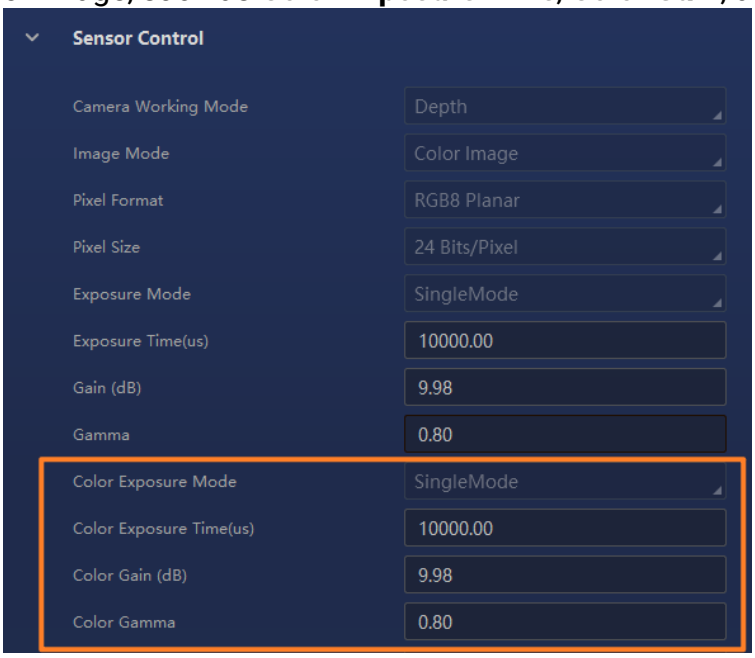

Figure 5-4 Set Color-Related Parameters

- When the image is too dark, you can increase the values of exposure and gain. If the exposure is set to the maximum value allowed by the current frame rate, and the image

requires more brightness, it is recommended to increase the gain first. As the exposure increases, the actual acquisition frame rate of the device decreases, which affects the efficiency of image acquisition.

- When the image is too bright, you can decrease the values of exposure and gain.

4. (Optional) After the color digital WDR function is enabled, the device acquires images and digitally enhances image quality by brightening too-dark areas and diminishing too-bright areas for easy viewing.

Note

- The color digital WDR function can be set only when the calibration mode is not selected as the **Camera Working Mode**.
- This function is supported by some device models.

5. (Optional) When the same scene in a color image changes in light and dark at different times, you can select **DynamicMode** as **Color Exposure Mode**, and set auto exposure offset X/Y, auto exposure width/height, auto exposure time upper/lower limit, gain upper/lower limit, brightness, and Gamma correction. After you set the brightness value, the device will automatically adjust the exposure time and gain between the upper and lower limit.

Note

The **Color Exposure Mode** can be set only when the acquisition is stopped.

IR Image

Steps

1. On the top bar of the live view window, click to view live images in IR image mode.

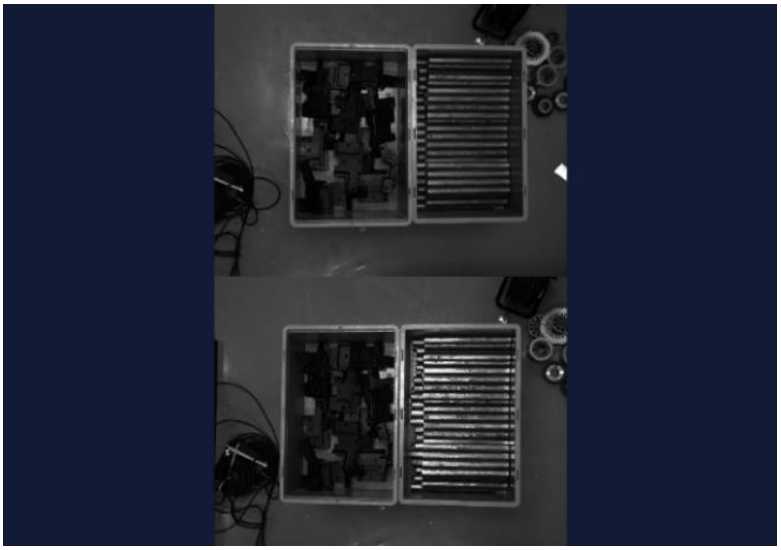

Figure 5-5 Live View in IR Image Mode

2. Go to **Basic Feature** → **Sensor Control** to set related parameters, such as **Exposure Time**, **Gain**, and **Gamma**.

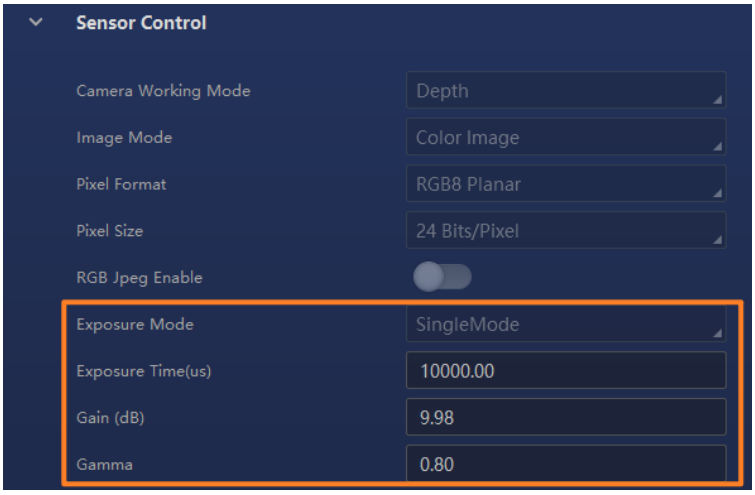

Figure 5-6 Set Exposure and Gain

3. (Optional) After the digital WDR function is enabled, the device acquires images and digitally enhances image quality by brightening too-dark areas and diminishing too-bright areas for easy viewing.

Note

- The digital WDR function can be set only when the calibration mode is not selected as the **Camera Working Mode**.
- This function is supported by some device models.

4. (Optional) When the IR image is partially too bright and too dark, you can select **MultipleMode** as **Exposure Mode**, and set Gamma correction and the two sets of exposure time and gain. The device will automatically execute polling and get the images with the set parameters.

Note

The **Exposure Mode** can be set only when the acquisition is stopped.

Depth Image / Point Cloud Image

On the top bar of the live view window, click or to view live images in depth image mode or point cloud mode.

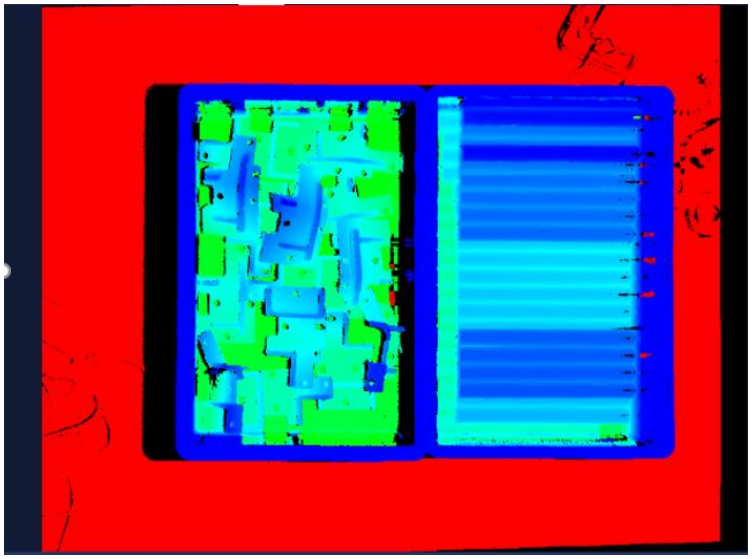

Figure 5-7 Live View in Depth Image Mode

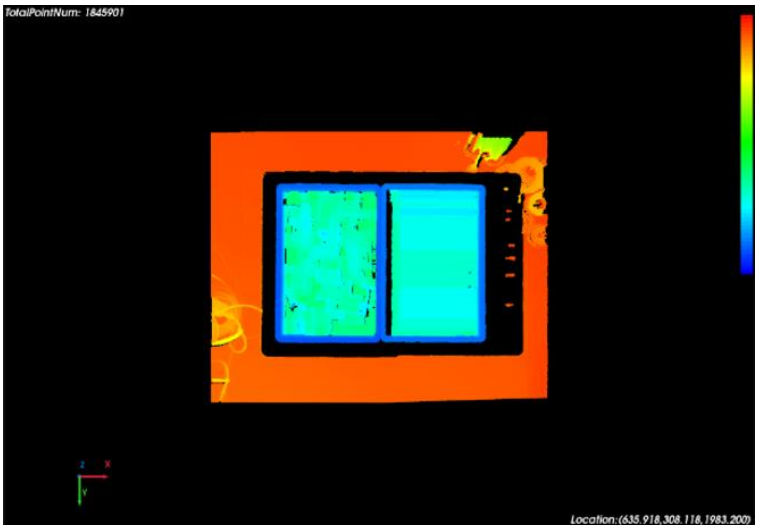

Figure 5-8 Live View in Point Cloud Mode

In the depth image mode and point cloud mode, click on the top bar of the live view window to set rendering mode: **Gray**, **Jet**, and **Texture**. The rendering-related parameters are introduced below.

- **Auto Mode**: After the function is enabled, the rendering range will be adjusted automatically. If the function is disabled, the rendering range will be between minimum value and maximum value, and you can adjust the value via the slider.
- **Fusion**: You can adjust the fusion value via the slider. The larger the value is, the greater the proportion of the RGB image will be, and the smaller the proportion of point cloud image will be. This parameter is valid when the rendering mode is **Texture**.

- **Display Mode**: You can select **Point** or **Plane** to display the rendering effect.
- **Side Wall**: After the function is enabled, the area where the height difference of the point cloud is within a specific range will be rendered in grids.
- **Palette Type**: You can select **RAINBOW**, **DARK_RAINBOW**, **DARK_GREEN**, **PINKISH_RED**, and **YELLOW**. This parameter is valid when the rendering mode is **Jet**.

Note

- In the depth image mode, only the **Gray** and **Jet** rendering mode can be set.
- The rendering-related parameters may differ by the rendering mode.

5.2.2 Set Algorithm-Related Parameters

When previewing the depth image and point cloud image, you need to adjust algorithm-related parameters according to the actual scene. Please refer to the section of algorithm parameters settings in the user manual.

5.2.3 Set Trigger-Related Parameters

After debugging the image effect, you need to set trigger-related parameters. Please refer to the trigger settings section in the user manual.

5.2.4 Save Parameters

After debugging the device parameters and images, you need to save the changes to prevent the device from restoring the default parameters after a power failure and restart. Please refer to the section of user set control in the user manual.

Chapter 6 I/O Electrical Features and Wiring

For type I, type III, and type IV devices, they have three opto-isolated input signals (Line 0/3/6) and three opto-isolated output signals (Line 1/4/7).
For type II device, it has one opto-isolated input signal (Line 0), one opto-isolated output signal (Line 1), and one non opto-isolated input signal (Line 2).

6.1 Input Signal

Opto-Isolated Input

The Line 0/3/6 (type I, type III, and type IV devices) and Line 0 (type II device) are opto-isolated input signals, and their internal circuit is as follows.

Note

- The input voltage ranges from 5 VDC to 30 VDC.
- The breakdown voltage is 36 VDC. Keep voltage stable.

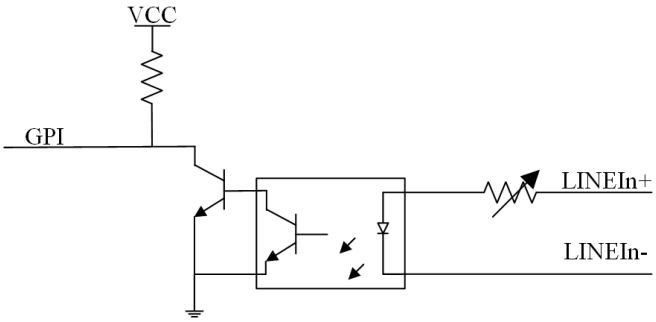

Figure 6-1 Internal Circuit of Input Signal

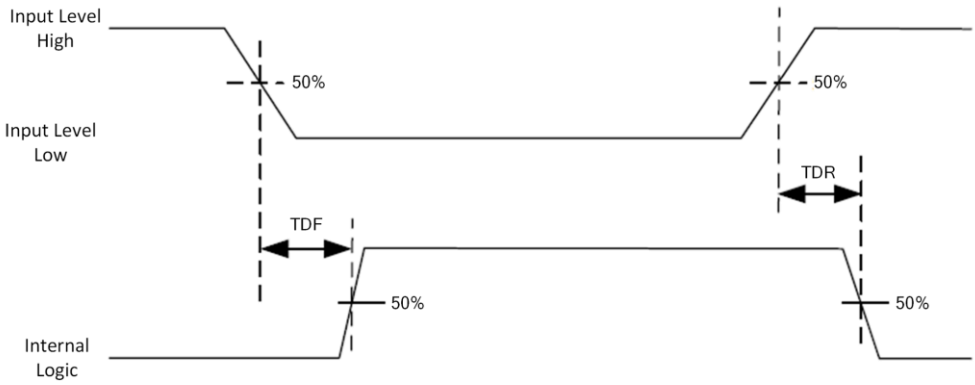

Figure 6-2 Input Logic Level

Table 6-1 Input Electrical Feature

Parameter Name	Parameter Symbol	Value
Input Logic Level Low	VL	1.5 VDC
Input Logic Level High	VH	2 VDC
Input Falling Delay	TDF	81.6 μs
Input Rising Delay	TDR	7 μs

Non Opto-Isolated Input

The type II device's Line 2 is non opto-isolated input signal, and its internal circuit is as follows.

Note

- Make sure that the input voltage is not from 0.3 VDC to 3.3 VDC, because the electric status between these two values are not stable.
- The breakdown voltage is 30 VDC. Keep voltage stable.
- To prevent damage to the GPIO pin, please connect GND first, and then input voltage in Line 2.

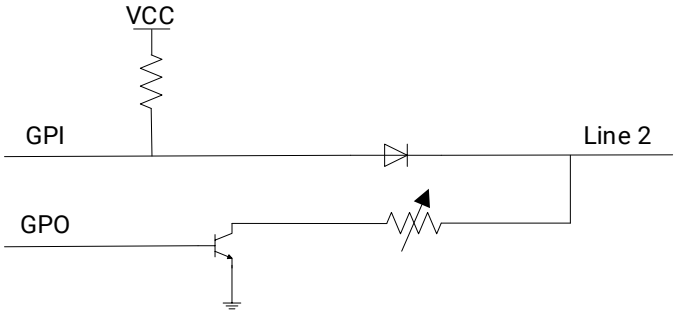

Figure 6-3 Internal Circuit of Input Signal

When the voltage is 5 VDC and the resistor is 100 Ω, the logic level and electrical feature of Line 2 are shown below.

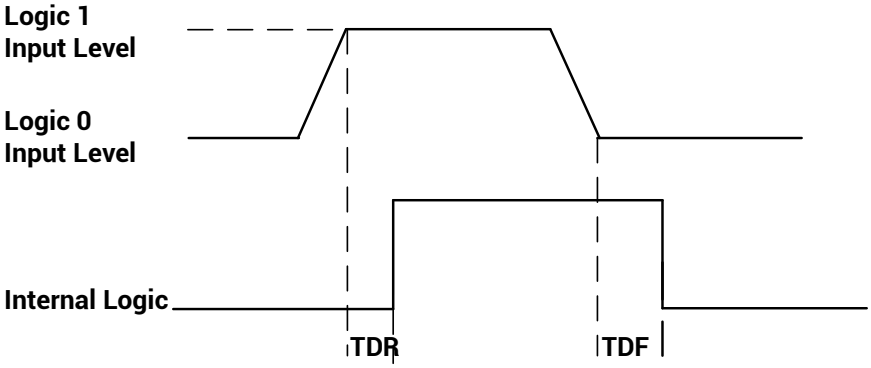

Figure 6-4 Input Logic Level

Table 6-2 Input Electrical Feature

Parameter Name	Parameter Symbol	Value
Input Logic Level Low	VL	0 VDC to 0.3 VDC
Input Logic Level High	VH	3.3 VDC to 24 VDC
Input Falling Delay	TDF	< 1 μs
Input Rising Delay	TDR	< 1 μs

6.2 Output Signal

The Line 1/4/7 (type I, type III, and type IV devices) and Line 1 (type II device) are opto-isolated output signals, and their internal circuit is as follows.

Note

- The output voltage ranges from 5 VDC to 30 VDC.
- The maximum output current is 45 mA.
- Do not directly connect with inductive load (e.g. DC motor, etc.) when outputting.

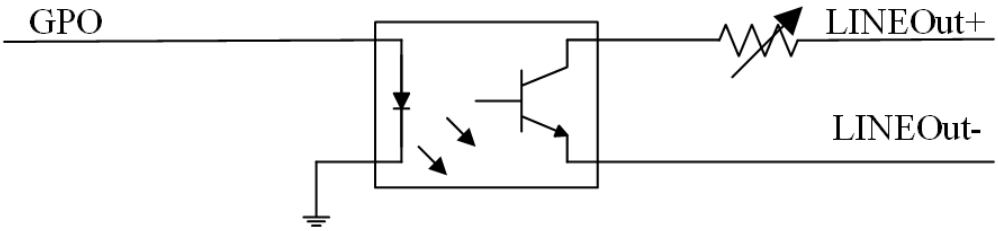

Figure 6-5 Internal Circuit of Output Signal

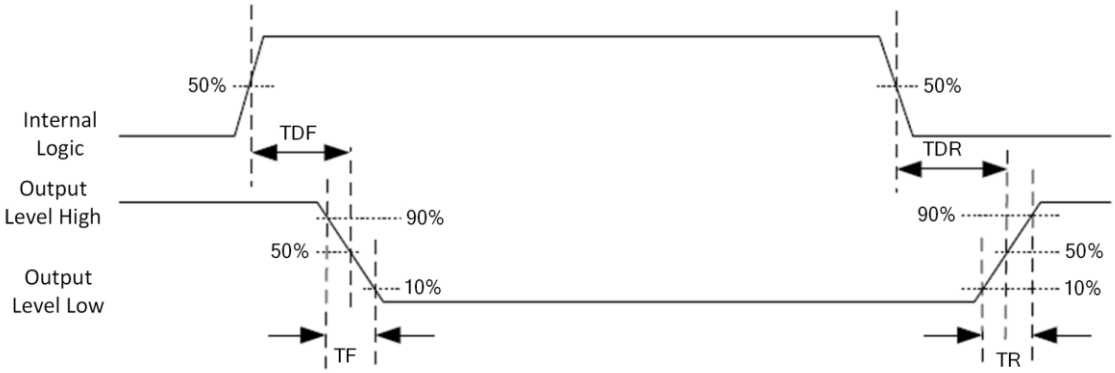

Figure 6-6 Output Logic Level

Note

If the external voltage and resistance change, the corresponding current of output signal and output logic level low may differ.

Table 6-3 Output Electrical Feature

Parameter Name	Parameter Symbol	Value
Output Logic Level Low	VL	730 mV
Output Logic Level High	VH	3.2 VDC
Output Falling Delay	TDF	6.3 μs
Output Rising Delay	TDR	68 μs
Output Falling Time	TF	3 μs
Output Rising Time	TR	60 μs

6.3 Input Signal Wiring

The device can receive external input signal via its I/O interface.

Note

Input signal wiring may differ with different types of external devices.

PNP Device

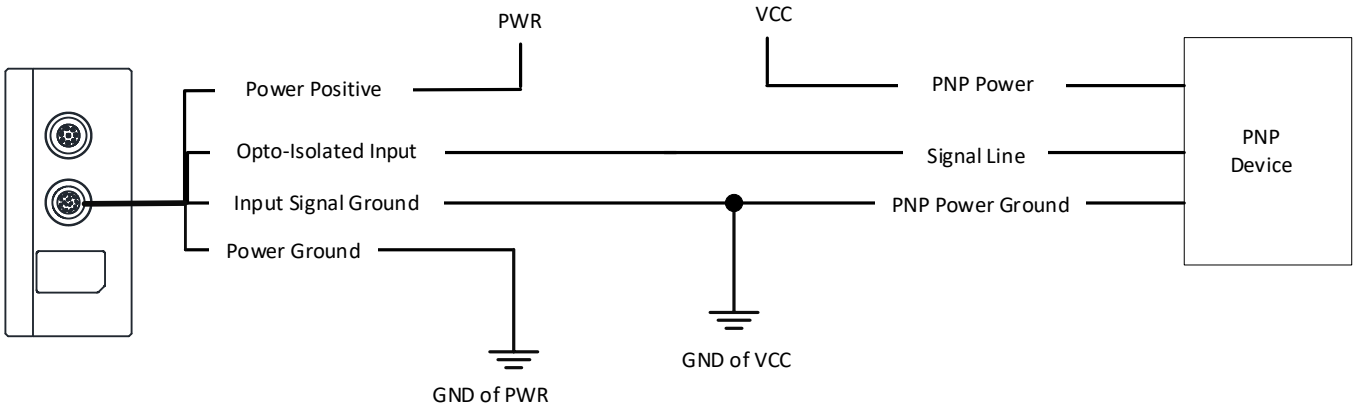

Figure 6-7 Input Signal Connecting to PNP Device

NPN Device

If the VCC of NPN device is 12 VDC or 24 VDC, it is recommended to use a 4.7 KΩ pull-up resistor.

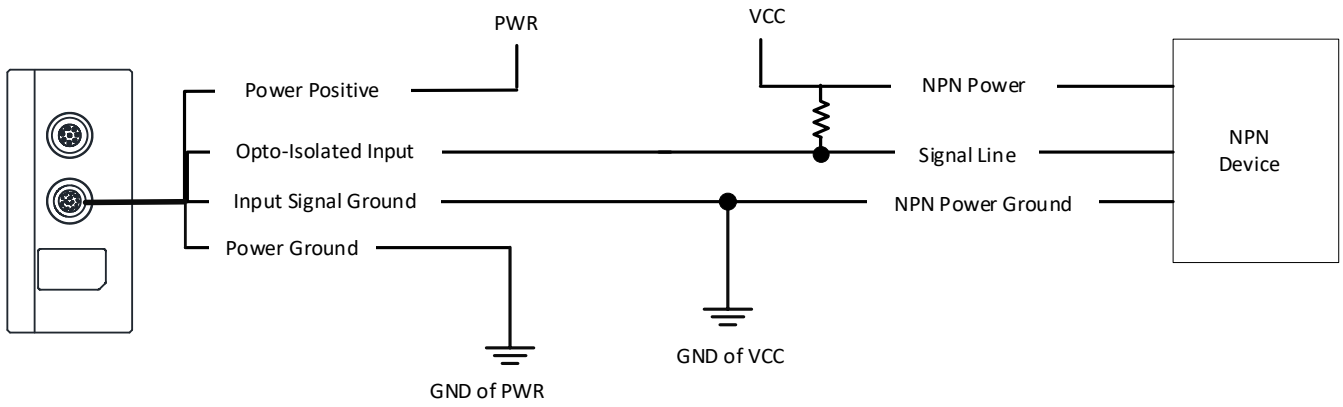

Figure 6-8 Input Signal Connecting to NPN Device

6.4 Output Signal Wiring

The device can output signal to external device via I/O interface.

Note

- Output signal wiring may differ with different types of external devices.
- The voltage of VCC should not be higher than that of PWR. Otherwise, the device's output may have exception.

PNP Device

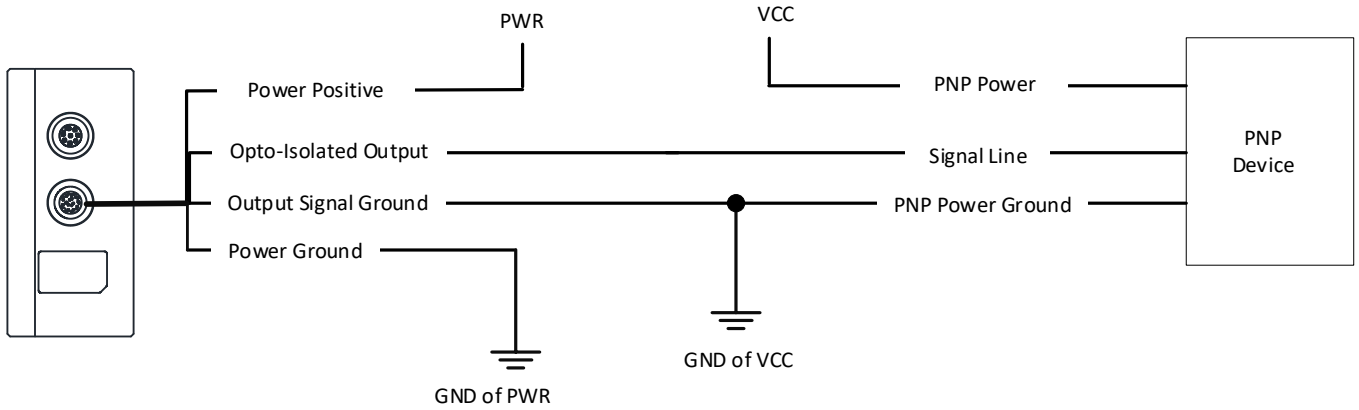

Figure 6-9 Output Signal Connecting to PNP Device

NPN Device

If the VCC of NPN device is 12 VDC or 24 VDC, it is recommended to use a 4.7 KΩ pull-up resistor.

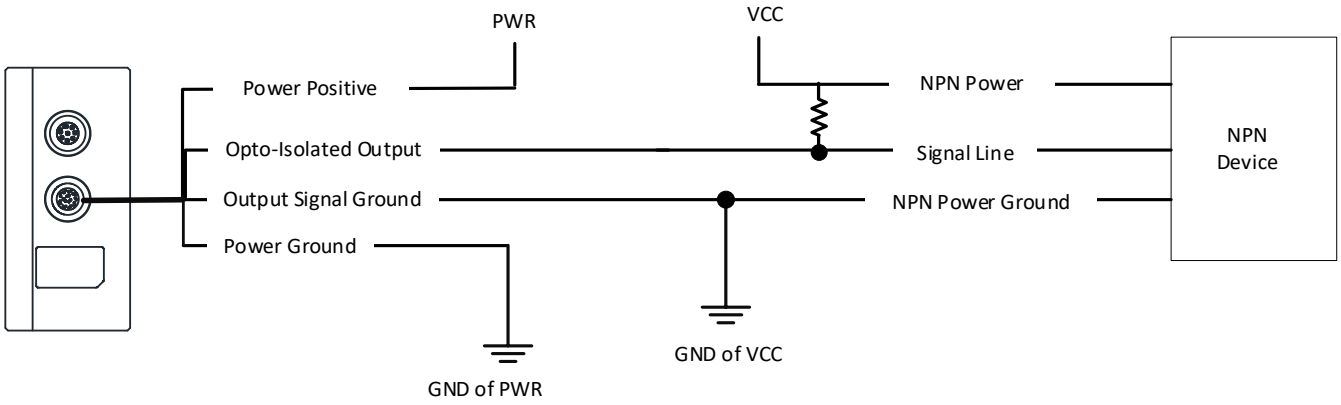

Figure 6-10 Output Signal Connecting to NPN Device

Chapter 7 Basic Features

7.1 Device Control

Note

The specific device control parameters may differ by device models.

In **Device Control**, you can view device information, or reset device, etc. The specific parameters in **Device Control** are shown below.

Table 7-1 Parameter Description

Parameter	Read/Write	Description
Device Model Name	Read Only	It is the model of the device.
Device Serial Number	Read Only	It is device's serial number. This string is a unique identifier of the device.
Device User ID	Read & Write	Device name and it is empty by default. You can set according to your preference. ● If User ID is empty, the client software displays the device model. ● If you set it, the client software displays the User ID you set.
Device Uptime (s)	Read Only	It is the period of time when device is powered up.
Device Connection Speed (Mbps)	Read Only	It indicates the speed of transmission of the specified connection.
Device Link Speed (Mbps)	Read Only	It indicates the speed of transmission negotiated on the specified link.
Device Reset	Read & Write	Click **Device Reset** to reset the device.
Find Me	Read & Write	It is used to find the current device.

7.2 Set Working Mode

The device supports different working modes, and you can set it according to actual

demands. Go to **Sensor Control** → **Camera Working Mode**, and set it.

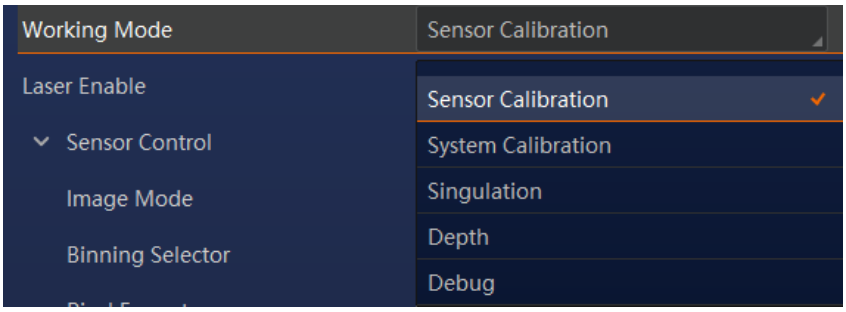

Figure 7-1 Set Working Mode

Table 7-2 Working Mode Description

Working Mode	Description
Sensor Calibration	The internal parameter calibration has been completed by default. If you need to re-calibrate, set the working mode to the sensor calibration.
System Calibration	Before the actual use of the device, the system calibration should be performed to determine the coordinate relation between the captured images and the real object. At this time, the working mode needs to be set to the system calibration mode.
Depth	It is used to output depth image of the measured object.
RGB-D	It is used to output aligned RGB-D image of the measured object.
Singulation	This mode is recommended when the device is used in singulation system for package positioning and separation. It can output the posture information of the measured object, and output images via the Chunk function.
Grasp	This mode is recommended when the device is used for the visual positioning of the robotic parcel-feeding system. It can locate the package information in the field of view of the device.
Quick Grasp	This mode is used in quick grasp scenario in the robotic parcel-feeding system, and its efficiency is higher than that of the grasp mode.
EDP Detect	This mode is recommended when the device is used for EDP (Empty, Double, and Position) detection. It can output the posture information of the measured object and output images via the Chunk function.
Volume Measure	It is used to measure volume of the object, including the dimension (L, W, H), the volume, and the object type.
Depalletizing	It is used to output depth image information of the object,

	applicable to vision positioning in palletizing/depalletizing system.
Debug	It is used to debug the device.

Note

The working mode may differ by device models.

7.3 Set Image Mode

The device supports outputting different images, including **Mono Image**, **Color Image**, **Depth Image**, **RGB-D Image**, **Dema Image**, and **Fuse Depth Image**. Go to **Sensor Control** → **Image Mode**, and select **Image Mode** according to actual demands.

Note

The image mode may differ by device models.

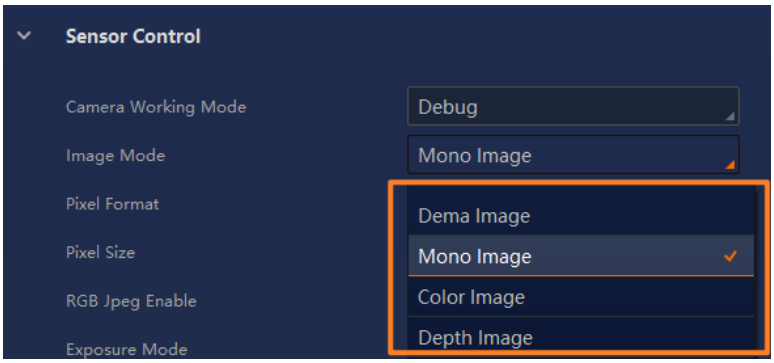

Figure 7-2 Set Image Mode

In different working modes, the device can output corresponding image modes as shown below.

Table 7-3 Relation between Working Mode and Image Mode

Working Mode	Supported Image Mode
Sensor Calibration	Mono Image, Color Image
System Calibration	Color Image, Depth Image
Depth	Color Image, Depth Image
RGB-D	RGB-D Image
Grasp	Color Image, Depth Image
Quick Grasp	Depth Image

EDP Detect	Mono Image, Color Image, Depth Image
Volume Measure	Color Image, Depth Image
Depalletizing	Color Image, Depth Image
Debug	Dema Image, Mono Image, Color Image, Depth Image, RGB-D Image, Fuse Depth Image

Note

- The singulation, grasp, and EDP detection image modes do not output images but output posture information of measured objects only.
- Color images in sensor calibration and in depth working mode are different.
- The image mode may differ by device models.

7.4 Set Pixel Format

This function allows you to set pixel format and view pixel size of the device. Go to **Sensor Control** → **Pixel Format**, and set pixel format and view pixel size. The relation among image mode, pixel format and pixel size is shown below.

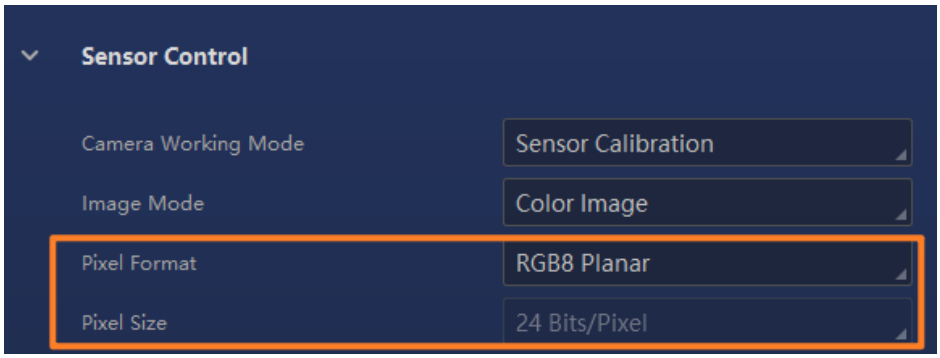

Figure 7-3 Set Pixel Format

Table 7-4 Relation Among Image Mode, Pixel Format and Pixel Size

Image Mode	Pixel Format	Pixel Size
Mono Image	Mono 8	8 Bits/Pixel
Depth Image	Coord3D_C16	16 Bits/Pixel
Color Image	RGB8 Planer	24 Bits/Pixel
RGB-D Image	Coord3D RGBD	40 Bits/Pixel
Dema Image	Mono 8	8 Bits/Pixel
Fuse Depth Image	Coord3D_C16	16 Bits/Pixel

The device also supports outputting image in JPEG format. Go to **Sensor Control** → **RGB**

Jpeg Enable and enable it.

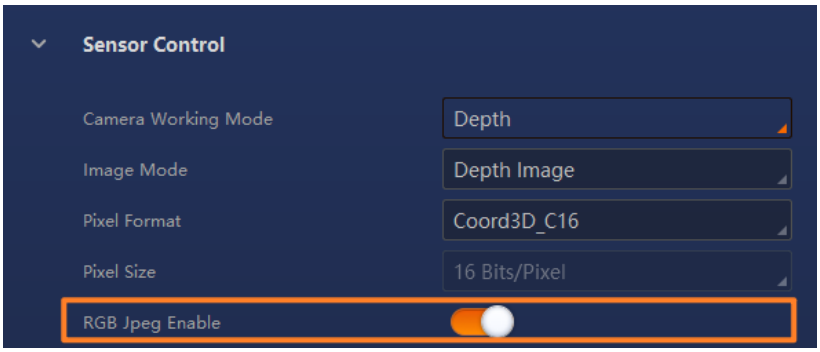

Figure 7-4 Enable RGB JPEG

7.5 Set Exposure Mode

The device supports two types of exposure mode, including single and multiple, which can control exposure time and gain. Go to **Sensor Control** → **Exposure Mode** and set it according to actual demands.

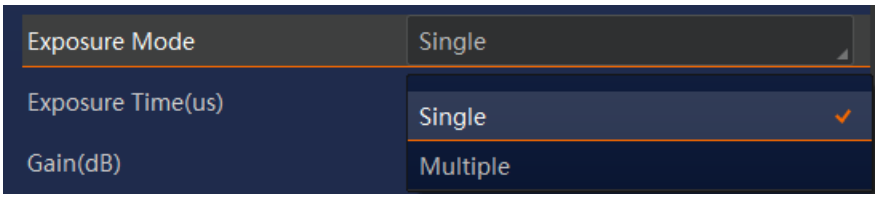

Figure 7-5 Set Exposure Mode

- Regarding the single exposure mode, you can set one set of exposure time and gain, and configure Gamma correction and digital WDR.

Figure 7-6 Single Exposure Mode

- Regarding the multiple exposure mode, you can set two sets of exposure time and gain, and configure Gamma correction and digital WDR.

Figure 7-7 Multiple Exposure Mode

Note

- The unit of exposure time is μs and unit of gain is dB.
- After the digital WDR function is enabled, the device acquires images and digitally enhances image quality by brightening too-dark areas and diminishing too-bright areas for easy viewing.
- The parameters may differ by device models.

7.6 Set Color Exposure Mode

The device supports two types of color exposure mode, including single and dynamic, which can control exposure time and gain. Go to **Sensor Control** → **Color Exposure Mode** and set it according to actual demands.

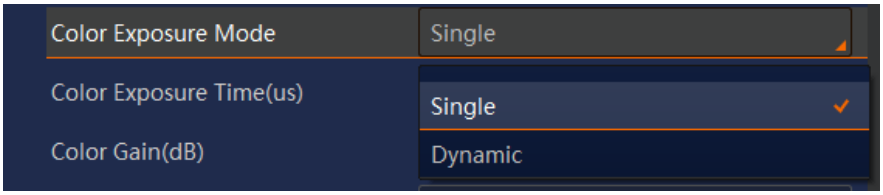

Figure 7-8 Set Exposure Mode

- Regarding the single exposure mode, you can set exposure time, gain, Gamma correction, and digital WDR.

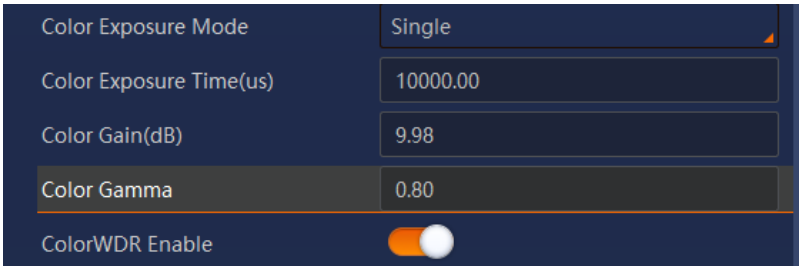

Figure 7-9 Single Exposure Mode

- Regarding the dynamic exposure mode, you can set auto exposure offset X/Y, auto exposure width/height, auto exposure time upper/lower limit, gain upper/lower limit, brightness, Gamma correction, and digital WDR. After you set the brightness value, the device will automatically adjust the exposure time and gain between the upper and lower limit.

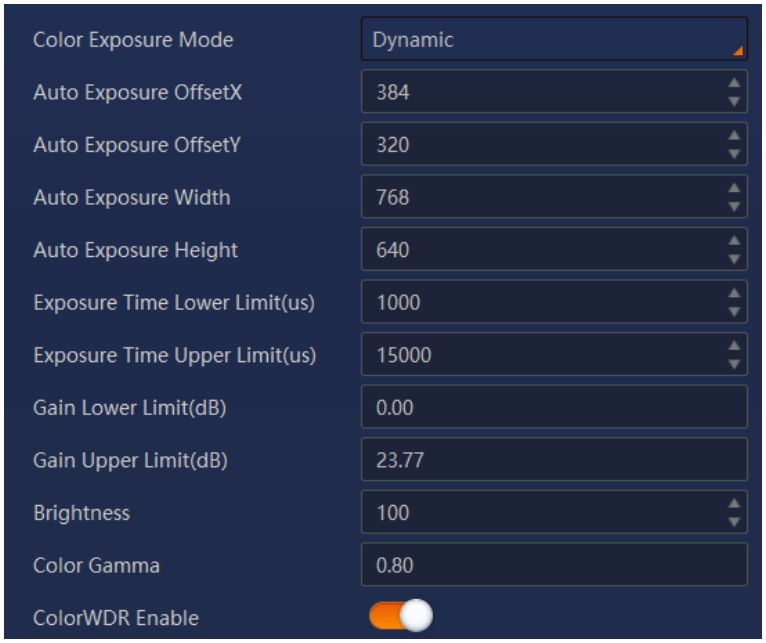

Figure 7-10 Dynamic Exposure Mode

Note

- The parameters may differ by device models.
- When the management mode is set to **Developer**, color exposure mode is **Single**, and acquisition is started, you can go to **All Features** → **Scan Control** → **Sensor Control** to execute one-click adjustment, and then the device will perform automatic adjustment of exposure time and gain for improving image brightness.

7.7 Set Binning

The purpose of binning is to enhance sensibility. With binning, multiple sensor pixels are combined as a single pixel to reduce resolution and improve image brightness. Go to **Sensor Control** → **Binning Selector** and set it.

Note

- Currently, the device supports 2 × 2 binning only.
- The **Binning** function is related to **Working Mode** and **Image Mode**.
- Improving image brightness in Binning mode is not supported for some device models.

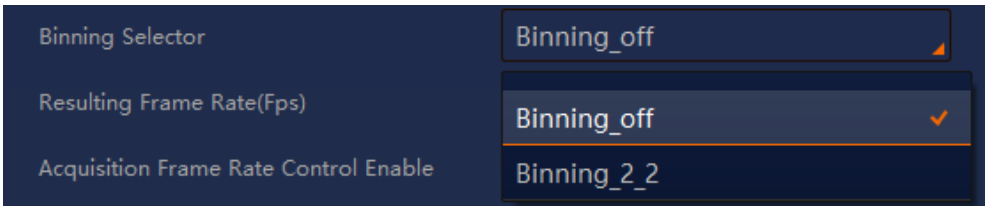

Figure 7-11 Set Binning

7.8 Set Frame Rate

Frame rate refers to the image quantity that is acquired by the device per second. The higher frame rate, and shorter time used for image acquisition will be. The following factors determine the device's frame rate in real-time.

- Binning: By using binning function, the device's resolution is reduced and the frame rate increases.
- Exposure time: If the reciprocal of max. frame rate that the camera supports is t, and when the configured exposure time is larger than t, the less the exposure time, the higher the frame rate will be. When the configured exposure time is less than or equal to t, exposure time will not affect the frame rate.
- Working mode: In different working modes, the corresponding algorithm mode and frame rate of original image are different. The frame rate of the original image in sensor calibration is less than that in depth mode.

Note

The frame rate is also affected by the network bandwidth. If the network transmission speed is Fast Ethernet network, the frame rate will be lower. It is recommended to make sure the network transmission is Gigabit Ethernet network.

Steps

1. Go to **Sensor Control** → **Acquisition Frame Rate**.
2. Enter **Acquisition Frame Rate**.
3. Enable **Acquisition Frame Rate Control Enable**.
4. View the camera's final frame rate in **Resulting Frame Rate**.

Note

- If the real-time frame rate is smaller than the value you set, the camera acquires images by the real-time frame rate.
- If the real-time frame rate is larger than the value you set, the camera acquires images by the value you set.

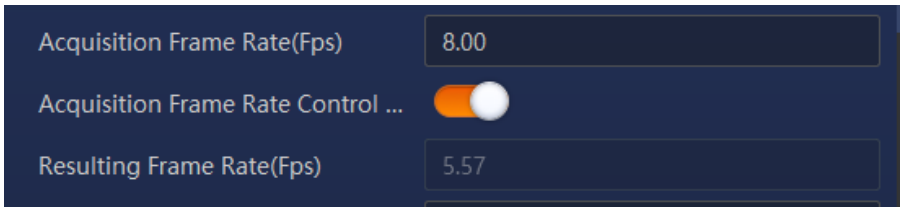

Figure 7-12 Set Frame Rate

7.9 Enable Laser

The laser inside the device is used to send laser speckle to the measured objects. Go to **Sensor Control** → **Laser Enable**, and enable **Laser Enable**.

Figure 7-13 Enable Laser

Note

- Avoid looking directly at the window of the laser module of the device to avoid irreversible damage to the eyes.
- The **Laser Enable** is not supported for some device models in specified working mode. In this situation, the laser is enabled by default.

7.10 Set Depth/RGB Align

The device supports Depth/RGB align function to render the depth image according to the coordinates of the RGB image for aligning the depth image with the RGB image and realizing accurate instance segmentation result.

Go to **Sensor Control** → **Depth/Rgb Align Enable**, and enable **Depth/Rgb Align Enable**.

Figure 7-14 Enable Depth/RGB Align

Note

- The Depth/RGB align function may differ by device models.
- The settings of this parameter will not be saved in the user parameter. When the device is reconnected, the parameter settings of the last disconnection will not change.

7.11 Set SDK Align

The device supports SDK align function for rendering the depth image based on the coordinates of the RGB image to align the depth image with the RGB image via SDK, increasing the accuracy of instance segmentation results. This function depends on the hardware environment in which the SDK runs. When the performance of the hardware environment is poor, it may cause a significant impact on the frame rate after this function is enabled.

Go to **Sensor Control** → **Sdk Align Enable**, and enable **Sdk Align Enable**.

Figure 7-15 Enable SDK Align

Note

The **SDK Align Enable** and **Depth/Rgb Align Enable** cannot be enabled at the same time.

7.12 Set JPEG Rendering

When a higher rendering frame rate is required in the application scenario, the **Render Jpeg Enable** can be enabled. At this time, only color images (in Jpeg format) will be outputted. Compared with the situation where both color images and depth images are outputted, the frame rate of the rendering data will be increased after this function is enabled.

Figure 7-16 Enable JPEG Rendering

Note

It is recommended to enable this function when the device is connected to a code reading platform.

7.13 Set Chunk Data Control

The device supports embedding image information into image data via the Chunk function. The supported image information include **Image**, **Time Stamp**, **Dema Image**, **RGB Image**, **Mono Image**, **Package Info**, **Instance Segmentation**, **Instance Segmentation Mask**, **Package Position Info**, **Depth Image**, and **Trigger Identifier**.

Steps

1. Go to **Chunk Data Control** and enable the chunk function.

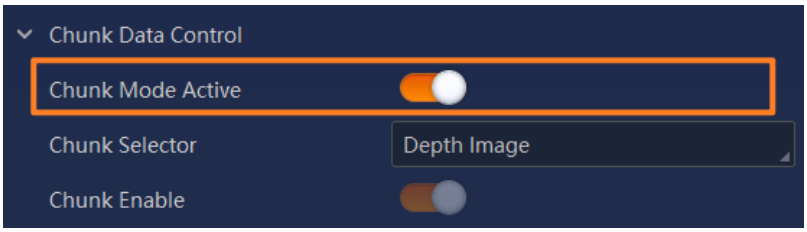

Figure 7-17 Enable Chunk

2. Select the image information, and enable the chunk.

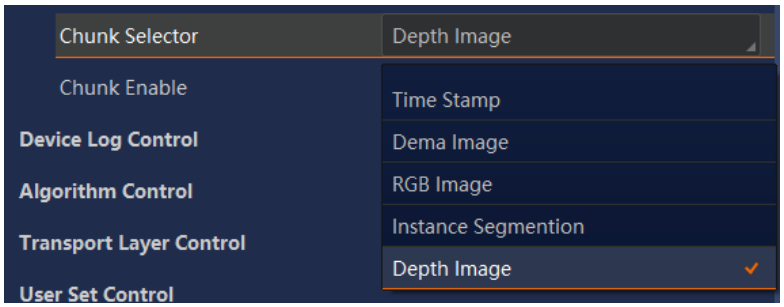

Figure 7-18 Select Information

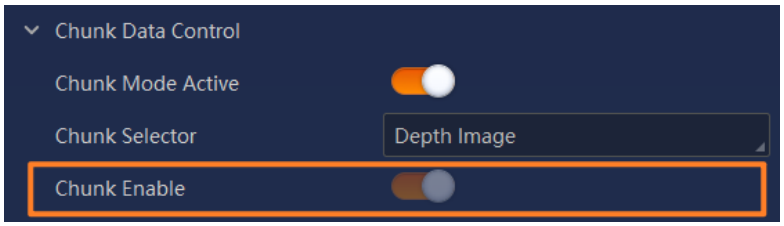

Figure 7-19 Enable Chunk

Note

- The supported image information may differ by device models.
- In some working modes, the **Chunk Mode Active** is enabled by default.
- For some device models, the **Chunk Enable** is enabled or disabled by default and cannot be changed.
- Repeat **Step 2** to add more information.

7.14 Set Transport Layer Control

You can go to **Transport Layer Control** to set the related parameters.

Note

The specific transport layer control parameters may differ by device models.

Table 7-5 Parameter Description of Transport Layer Control

Parameter	Read/Write	Description
GEV Heartbeat Timeout (ms)	Read & Write	It indicates the current heartbeat timeout in milliseconds.
GEV SCPS Packet Size(B)	Read & Write	It is the device's packet size during transmission process.
Payload Size(B)	Read	It is the device's load size during transmission process.

7.15 Set Communication Control

You can go to **Communication Control** to set communication related parameters.

Note

- The specific communication parameters may differ by device models.
- Some device models may not support communication function.

Table 7-6 Parameter Description of Transport Layer Control

Parameter	Description
EDP Transport Enable	After you set the EDP-related parameters, enable the function.
EDP Message Type Select	You can select EDP message type according to actual demands. ● PackageStatus: The status of package. ● OriginalPosition: The original position of the package. ● TriggerMessage: Combined with EDP tool for sending trigger message.
EDP Transport Mode	SERVER means the device serves as a server in communication for EDP transport.
EDP Transport Port	The specified TCP service port No. when the device sends EDP message as a server.

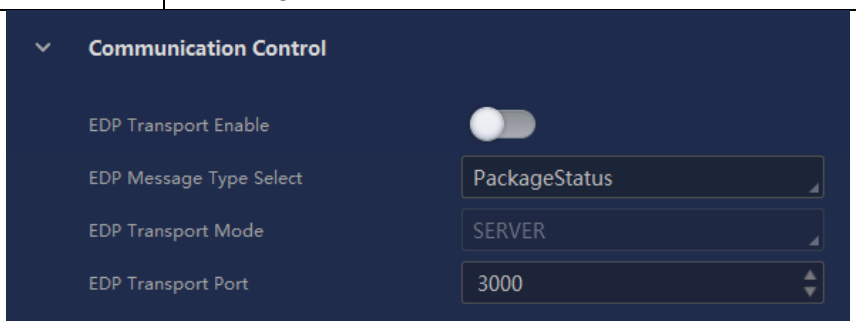

Figure 7-20 Communication Control

7.16 User Set Customization

This function allows you to save or load camera settings. The device supports four sets of parameters, including one default set and three user sets, and the relation among four sets of parameters is shown below.

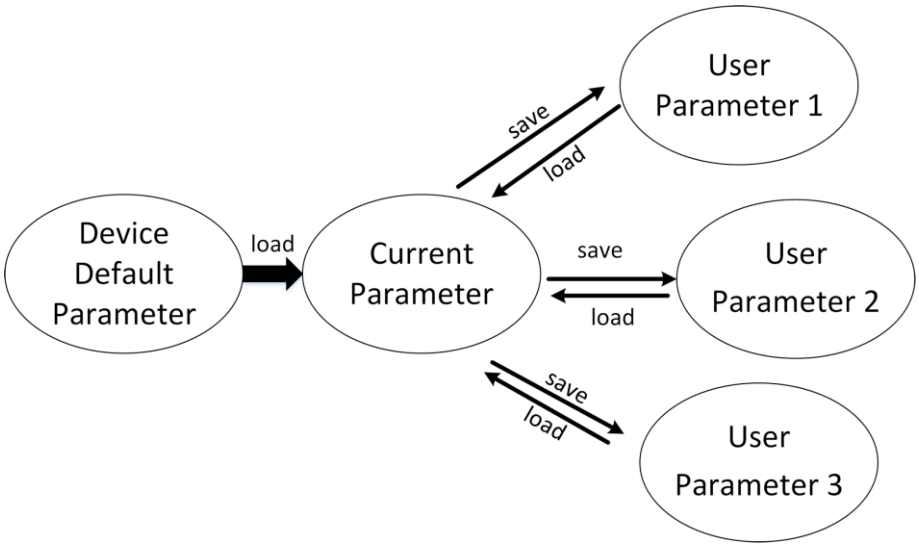

Figure 7-21 Parameter Relation

7.16.1 Save User Set

Steps

1. Click **User Set Control**, and select a user set in **User Set Selector**.

Note

Here we take selecting **User Set 1** as an example.

2. Click **User Set Save** to save parameter.

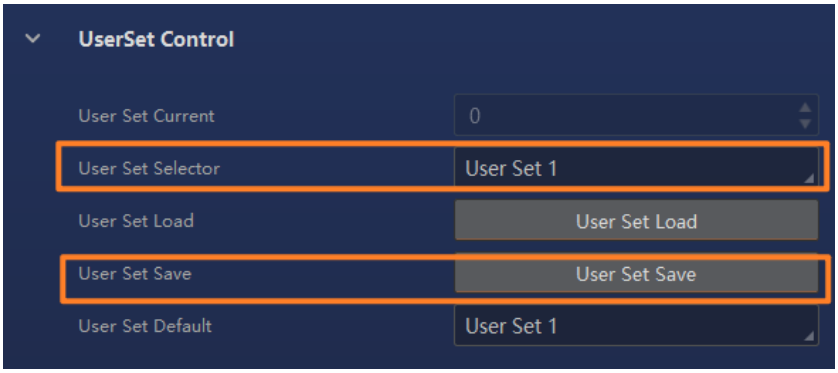

Figure 7-22 Save User Set

7.16.2 Load User Set

Steps

Note

Loading user set is available only when the camera is connected, but without live view.

1. Click **User Set Control**, and select a user set in **User Set Selector**.

Note

Here we take selecting **User Set 1** as an example.

2. Click **User Set Load** to load parameter.

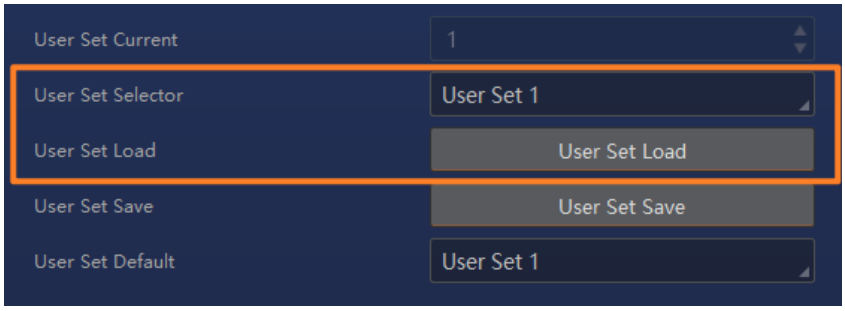

Figure 7-23 Load User Set

7.16.3 Set User Default

You can also set default parameter by clicking **User Set Control**, and select a user set in **User Set Default**.

Note

Here we take selecting **User Set 1** as an example.

Figure 7-24 Set User Default

Chapter 8 Trigger Settings

This section introduces how to configure the device's trigger input function to acquire images.

8.1 Set Trigger Mode

The device supports two types of trigger mode, including internal trigger mode and external trigger mode. Go to **IO Input**→ **Trigger Mode**, and set it.

- **Internal Trigger Mode**: In this mode, the device acquires images via its internal signals.
- **External Trigger Mode**: In this mode, the device acquires images via external signals like software signal and hardware signal. The trigger source of external trigger mode includes software trigger and hardware trigger.

8.1.1 Enable Internal Trigger Mode

Go to **Trigger** → **IO Input** → **Trigger Mode**, and select **Off** as **Trigger Mode**.

Note

Off refers to the internal trigger mode.

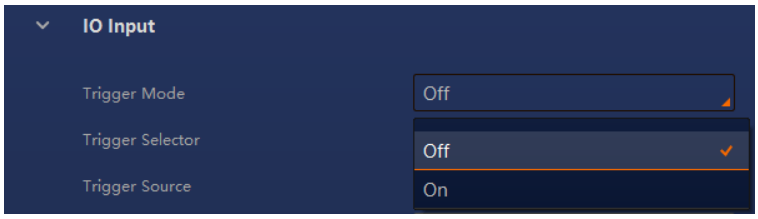

Figure 8-1 Enable Internal Trigger Mode

8.1.2 Enable External Trigger Mode

Go to **Trigger** → **IO Input** → **Trigger Mode**, and select **On** as **Trigger Mode**.

Note

On refers to the external trigger mode.

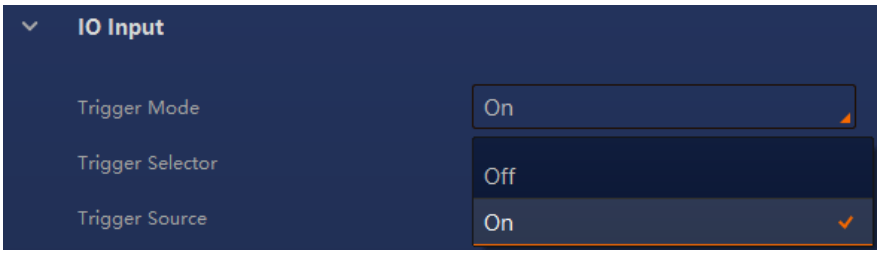

Figure 8-2 Enable External Trigger Mode

8.2 Set Trigger Source

The device's external trigger source includes software trigger and hardware trigger. Go to **Trigger** → **IO Input** → **Trigger Source**, and select **Trigger Source** according to actual demands.

Note

Make sure that the **Trigger Mode** is **On**.

Table 8-1 Trigger Source Description

External Trigger Source	Parameter	Description
Software Trigger	Software	The software sends trigger signal to the device to acquire images.
Hardware Trigger	Line *	External device connects to the device via device I/O interface. External device sends trigger signal to device to acquire images.

Figure 8-3 Set Trigger Source

8.2.1 Set and Execute Software Trigger Mode

Steps

1. Go to **Trigger** → **IO Input** → **Trigger Mode**, and select **On** as **Trigger Mode**.
2. Select **Software** as **Trigger Source**.
3. Click **Execute** in **Trigger Software**.
4. (Optional) Set **AutoTriggerTime** and enable **Enable Auto Trigger**. The device will automatically acquires images according to the set time.

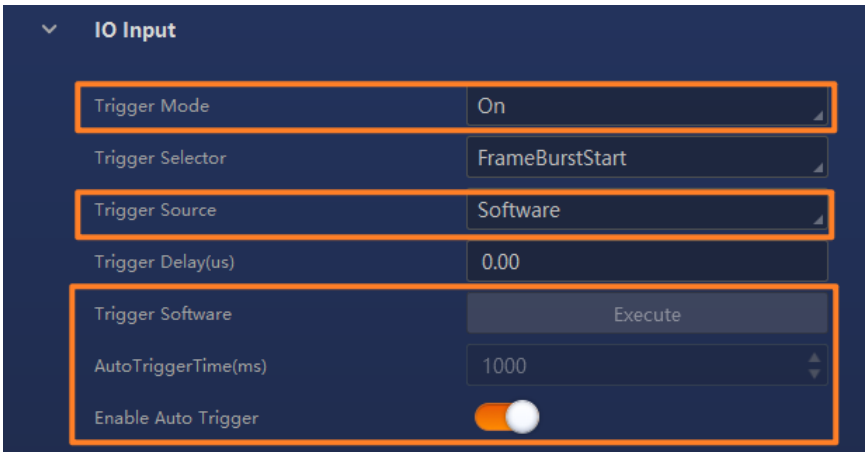

Figure 8-4 Set and Execute Software Trigger Mode

Note

Refer to section ***Set Trigger Related Parameters*** for parameters that can be configured in the trigger source, including trigger delay, acquisition burst frame count, and trigger cache.

8.2.2 Set and Execute Hardware Trigger Mode

Steps

1. Go to **Trigger** → **IO Input** → **Trigger Mode**, and select **On** as **Trigger Mode**.
2. Select **Line *** as **Trigger Source** according to actual demands.

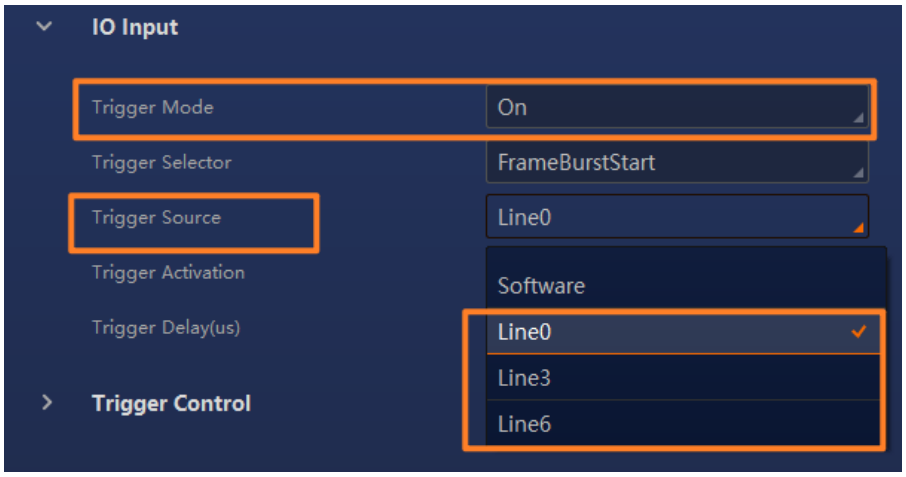

Figure 8-5 Set and Execute Hardware Trigger Mode

Note

Refer to section ***Set Trigger Related Parameters*** for parameters that can be configured in the trigger source, including trigger activation, trigger delay, acquisition burst frame count, trigger cache, and trigger debouncer.

8.3 Set Trigger Related Parameters

In external trigger mode, you can set related parameters, including trigger activation, trigger delay, acquisition burst frame count, trigger cache, and trigger debouncer.

Note

Different trigger sources can set various parameters in external trigger mode. Refer to the table below

Table 8-2 Trigger Source and Trigger Related Parameters

External Trigger Source / Trigger Parameter	Software Trigger	Hardware Trigger
Trigger Activation	×	√
Trigger Delay	√	√
Acquisition Burst Frame Count	√	√
Trigger Cache	√	√
Trigger Debouncer	×	√

8.3.1 Set Trigger Activation

The device supports trigger acquisition in the rising edge, falling edge, level high, or level low of the external signal. Go to **Trigger → IO Input →Trigger Activation**, and select **Rising Edge**, **Falling Edge**, **Level High**, or **Level Low** as **Trigger Activation**.

- **RisingEdge**: It means that when the level signal sent by external device is in rising edge, the device receives trigger signal and starts to acquire images.
- **FallingEdge**: It means that when the level signal sent by external device is in falling edge, the device receives trigger signal and starts to acquire images.
- **LevelHigh**: The level high of the trigger signal is valid. As long as the trigger signal is in level high, the device is in image acquisition status.
- **LevelLow**: The level low of the trigger signal is valid. As long as the trigger signal is in level low, the device is in image acquisition status.

Figure 8-6 Set Trigger Activation

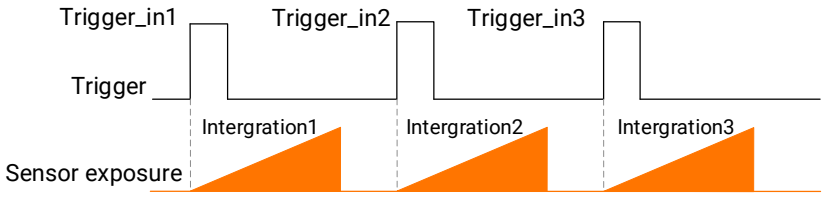

Figure 8-7 Rising Edge

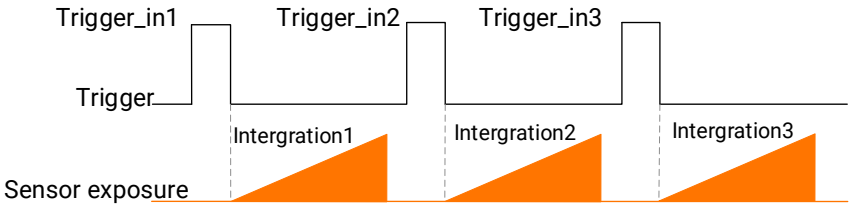

Figure 8-8 Falling Edge

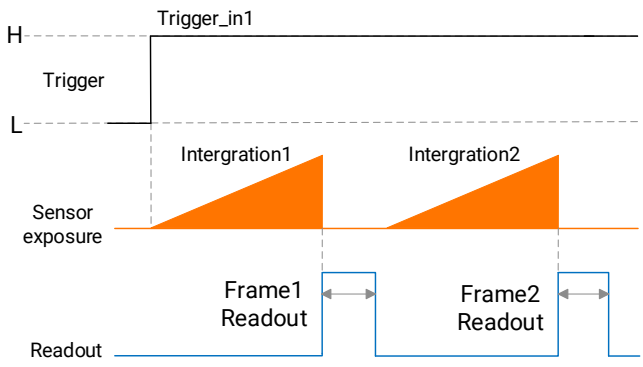

Figure 8-9 Level High

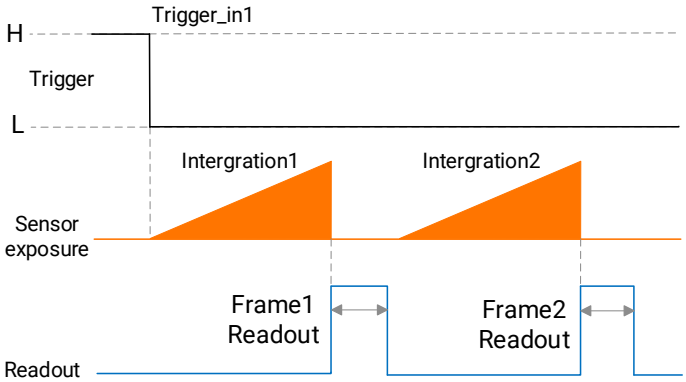

Figure 8-10 Level Low

8.3.2 Set Trigger Delay

The trigger delay function allows the device to add a delay between the receipt of trigger signal and the moment the trigger becomes active. Go to **Trigger** → **IO Input** → **Trigger Delay**, and enter **Trigger Delay**.

Note

- When the **Rising Edge** or **Falling Edge** is selected, the **Trigger Delay** can be set.
- The unit of trigger delay is μs.
- The sequence diagram below uses rising edge as trigger activation.

Figure 8-11 Set Trigger Delay

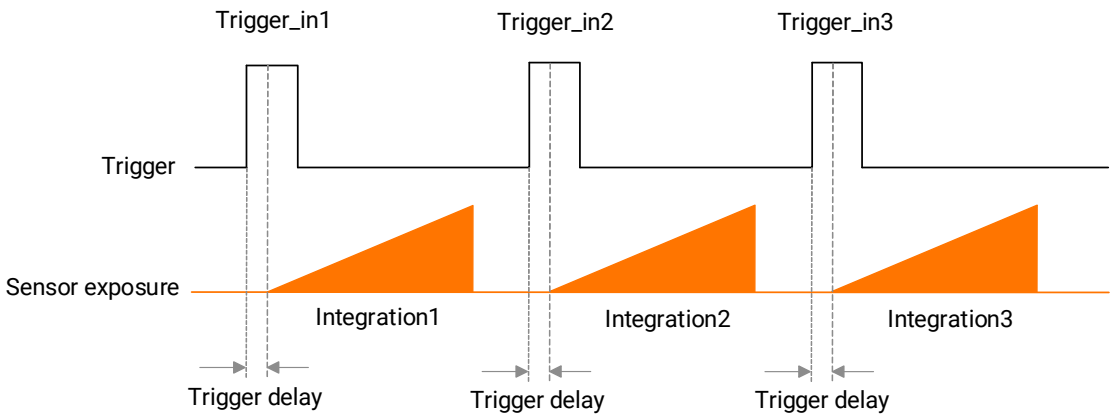

Figure 8-12 Sequence Diagram of Trigger Delay

8.3.3 Set Acquisition Burst Frame Count

In external trigger mode, you can set acquisition burst frame count. Go to **Trigger Control → Acquisition Burst Frame Count**, and enter **Acquisition Burst Frame Count** according to actual demands.

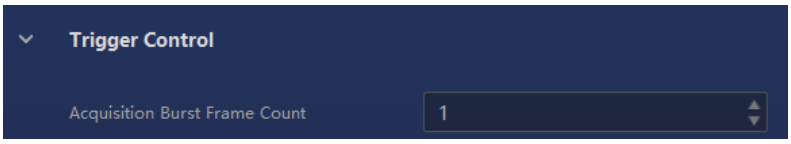

Figure 8-13 Set Acquisition Burst Frame Count

Note

- If **Acquisition Burst Frame Count** is 1, the device is in single frame trigger mode. If **Acquisition Burst Frame Count** is larger than 1, the device is in multi-frame trigger mode.
- If **Acquisition Burst Frame Count** is n, when 1 trigger signal is inputted to the device, the device stops acquiring images after exposing n times and outputting n frame images.
- The sequence diagram below uses rising edge as trigger activation.
- When multiple exposure mode is selected as the exposure mode, this parameter cannot be set.

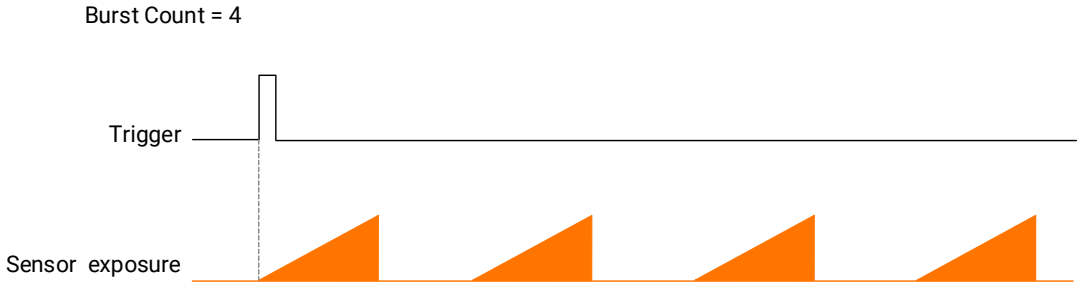

Figure 8-14 Sequence Diagram of Acquisition Burst Frame Count

8.3.4 Set Trigger Cache

The trigger cache function allows the device to save and process new signal during trigger stage, and the device can save and process three trigger signals at most. Go to **Trigger Control → Trigger Cache Enable**, and enable **Trigger Cache Enable**.

Figure 8-15 Set Trigger Cache

For example, if the device receives the 2nd trigger signal when it is processing the 1st trigger signal, and the result will be different depending on whether **Trigger Cache Enable** is enabled or not.

- The 2nd trigger signal will be filtered without processing if **Trigger Cache Enable** is disabled.

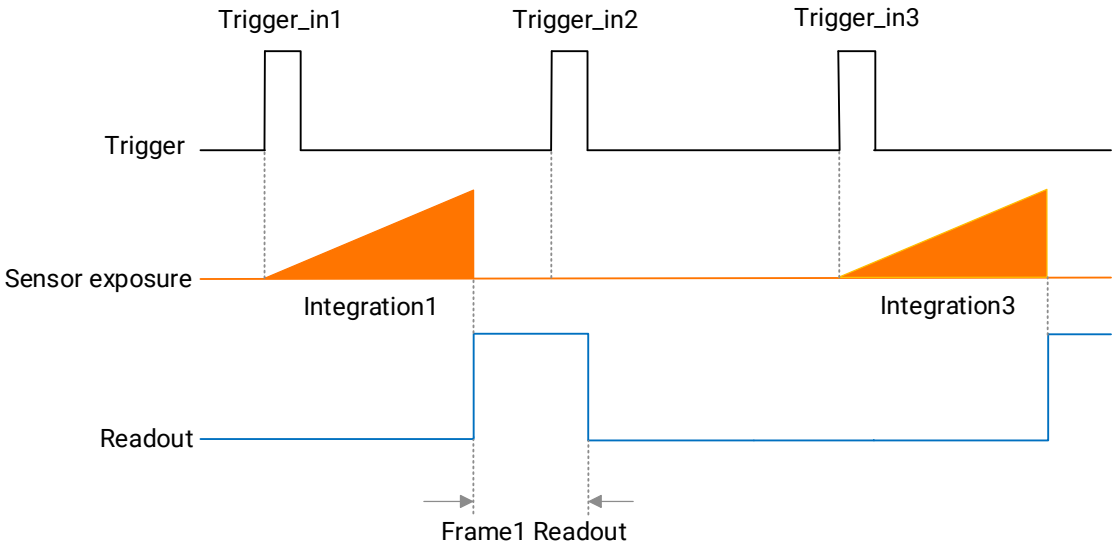

Figure 8-16 Second Frame Filtered

- The 2nd trigger signal will be saved if **Trigger Cache Enable** is enabled.

If the 1st frame image's exposure time of the 2nd trigger signal is not earlier than the device's last frame creation time of the 1st trigger signal, and then the 2nd trigger signal's

1st frame image is created normally.

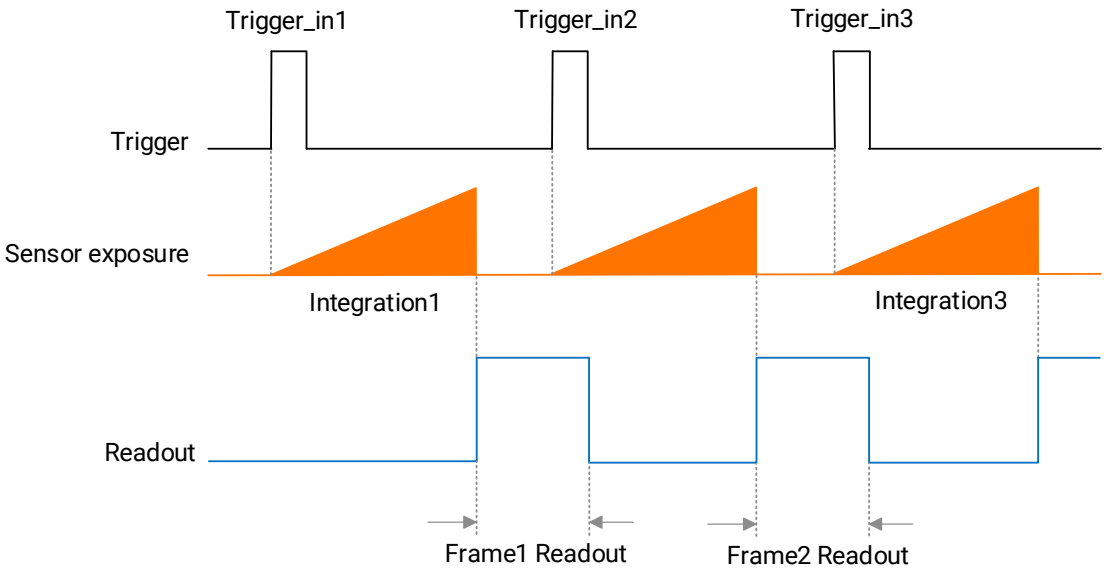

Figure 8-17 Second Frame Created Normally

If the 1st frame image's exposure time of the 2nd trigger signal is earlier than the device's last frame creation time of the 1st trigger signal, and then the device will delay this exposure time. Thus make sure that this exposure time is not earlier than the device's last frame creation time of the 1st trigger signal.

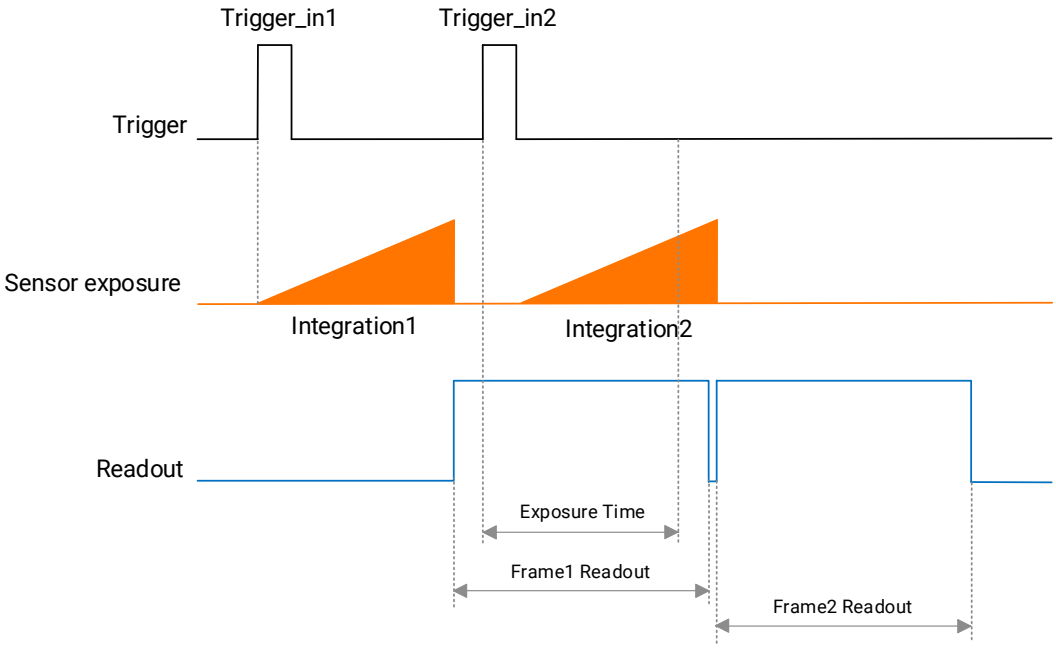

Figure 8-18 Sequence Diagram

Note

The three sequence diagrams above use rising edge as trigger activation.

8.3.5 Set Trigger Debouncer

The trigger debouncer function allows the device to filter out unwanted short external trigger signal that is input to the device.
Go to **Trigger Control**, select a Line in **Line Debouncer Selector**, and enter **Line Debouncer Time** according to actual demands. The range of **Line Debouncer Time** is from 0 μs to 1000000 μs.

Note

If the **Line Debouncer Time** you set is larger than the time of trigger signal, this trigger signal will be ignored.

Figure 8-19 Set Trigger Debouncer

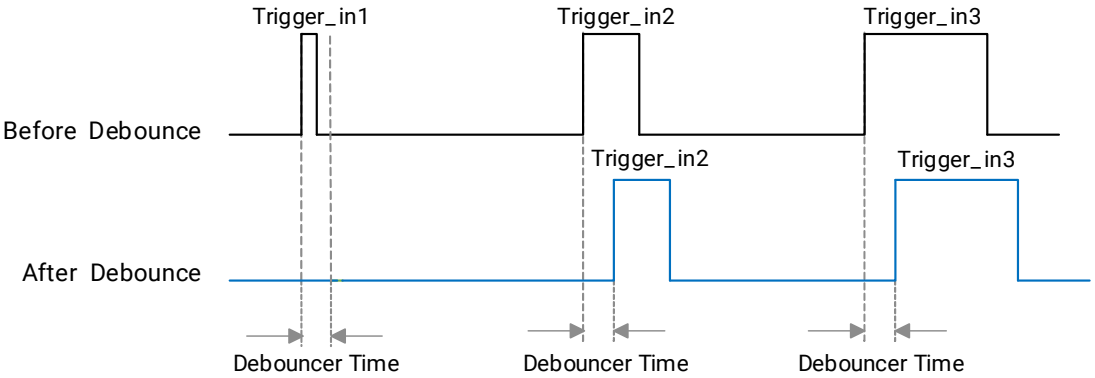

Figure 8-20 Sequence Diagram of Trigger Debouncer

Note

The sequence diagram above uses rising edge as trigger activation.

Chapter 9 Algorithm Parameters Settings

The device supports package singulation algorithm, depth algorithm, instance segmentation algorithm, package detection algorithm, grasp algorithm, etc., and you can go to **Algorithm Control** and set them accordingly.

Note

The specific parameters may differ by device models.

9.1 View Algorithm Status Code

You can go to **Algorithm Control** → **Algorithm Status Code** to view the device's algorithm status code for troubleshooting.

Figure 9-1 View Algorithm Status Code

9.2 Set Package Singulation Algorithm Parameters

You should set package singulation parameters via **Pkg Singulated Control** when the device is used in the package singulation or EDP system. The specific parameters are shown below.

Table 9-1 Package Singulation Parameters

Parameters	Description
Detection Range Selector	Detection Range Selector sets the direction of detection range, including X, Y, and Z.
Min. Detect Range Max. Detect Range	After the direction is configured, **Min. Detect Range** and **Max. Detect Range** set the detection start point and end point relative to the system coordinate origin point. Data between **Min. Detect Range** and **Max. Detect Range** will be outputted, as shown below.

	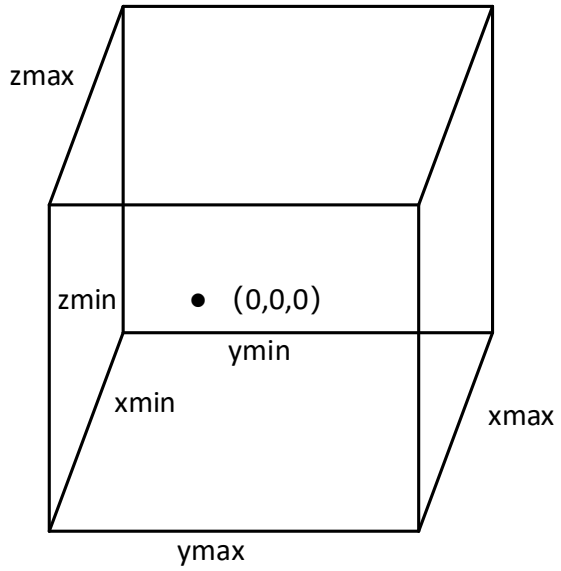 **Figure 9-2 Detection Range Settings** **Note** You need to set **Min. Detect Range** and **Max. Detect Range** in X, Y, and Z directions.
Edge Ration Threshold	It sets the proportion of the min. external rectangle of the segmentation result that exceeds the edge range. If the actual ration is higher than the configured one, the device will no longer track.
Track Enable	Enable this parameter if frame loss occurs to increase the stability of output results. After the parameter is enabled, you need to set **Track Frames**. The larger this parameter, the smoother the output result. It is recommended to set it to 1. **Note** It is recommended to set **Track Frames** to 0 if the device is used in EDP mode.
Edge Filter Distance	Since packages on the edge of the RGB image are often inaccurately located, these packages can be shielded by setting the physical edge filtering distance for package location to ensure the accuracy of the device outputting packages' posture. If there is a missed detection of packages on image edge, you can decrease the value. If postures of packages on image edge are inaccurate, you can increase the value.
Max. Fill Point Counter	It is the default height threshold for packages when no depth image exists. When no depth data for the corresponding part

	of the package occurs if the imaging environment is poor or the installation scheme is inappropriate, the 3D posture will be reconstructed according to the default height threshold.

Figure 9-3 Package Singulation Parameters

Change the management mode to **Developer**, and go to **All Features** → **Algorithm Control** → **Package Singulated Control** to set more related parameters.

Parameters	Description
PkgEdgeRatio	Filtering is performed based on the overlap between the package and the detection range. The larger the value, the more detection range it can exceed. In an inclined installation scenario, it is recommended to set the parameter as 100, and then filtering will not be performed.
PkgEdgeFilterDist	The 3D coordinates are reconstructed for the RGB image edge, and the coordinate range is reduced according to this parameter to filter the packages out of the coordinate range and avoid false detection of packages at the image edge. This parameter is commonly used in multi-camera singulation scenario.
PkgPoseRefineEnable	Use a depth image to refine the package posture detected by instance segmentation, which is commonly used in singulation scenario. It can remove the background point cloud of large package and keep the upper surface to avoid large package posture. In the EDP scenario, it is recommended to disable this function, because the packages on the edge of the RGB

	image with sparse point cloud should be detected.
NonDepthPkgHeight	When the corresponding depth image of the package is empty, you can set a default height for the package, which is commonly used in the scenario where the closest distance of the device exceeded by the high package or the depth image is empty. The value is determined by the specific installation scene. ● When the quality of the depth image is normal, the value should be the same as the closest distance. ● When the depth image is empty due to image quality problems or ambient light factors, it is recommended to keep the default value as 0.
RemovePlaneEnable	It controls whether to remove plane misdetection or not, commonly used in the scenarios where there are no ultra-thin parts but there are stains. Do not enable this parameter when there are ultra-thin parts, otherwise it will cause the missing detection.
PlaneHeightThd	It is valid when **RemovePlaneEnable** is enabled. This value can determine whether it is a plane misdetection or not based on the height of the point cloud of the package. The larger the value, the greater the probability of plane misdetection.
PlaneHeightDiffThd	It is valid when **RemovePlaneEnable** is enabled. This value can determine whether it is a plane misdetection or not based on the height difference between the package point cloud and the adjacent background point could. The larger the value, the greater the probability of plane misdetection.
PkgTrackEnable	It controls whether the packages are tracked based on time sequence or not. The same package will be assigned the same tracking No. in different frames, commonly used in EDP detection scenarios when there is no photoelectric trigger. When this parameter is enabled, the package will be replenished based on time sequence even if it disappears occasionally, so there is no need to enable this parameter in the EDP scenario of singulation and triggering.
PkgTrackFrameNum	It is valid when **PkgTrackEnable** is enabled, and it sets the allowed number of disappeared frames during package tracking. It is not recommended to set this value too large, otherwise the package will still be detected when it exceeds the edge.
TrackSpeedX(mm/s)	It is valid when **PkgTrackEnable** is enabled, and it sets the

	running speed of the conveyor in the X-axis. This speed should be the same as the actual speed, otherwise it will result in a prediction error and small packages may fail to be tracked.
TrackSpeedY(mm/s)	It is valid when **PkgTrackEnable** is enabled, and it sets the running speed of the conveyor in the Y-axis. This speed should be the same as the actual speed, otherwise it will result in a prediction error and small packages may fail to be tracked.

Figure 9-4 Package Singulation Parameters

9.3 Set Instance Segmentation Algorithm Parameters

You should set instance segmentation algorithm parameters via **Instance Segmentation Control**, as shown below.

- **Max. Object Number**: It is the max. number of searched objects. If the number of valid targets is lower than this value, the device will output all valid target results. If the number of valid targets is larger than this value, the device will output the valid target result according to the configured max. object number.
- **Min. Score**: If the measured object score is lower than this value, the object detection result will not be output.
- **Max. Overlap**: It sets the max. overlap rate of measured objects.
- **OutFilter Enable**: After this parameter is enabled, the target will be filtered when the ratio

of the area occupied by the target in the ROI to the total area is less than the value set in **OutFilter Score**.

- **OutFilter Score**: It refers the ratio of the area occupied by the target in the ROI to the total area. It should be between 1 and 100, and 100 means the target is in the ROI.
- **Crop Flag**: After this parameter is enabled, the image can be cropped via ROI, and then segmentation detection can be used for the cropped image. It is recommended to use this function for the small-sized target.
- **Resize Type**: You can select **Fix** or **Adaptive**. **Fix** mode means that downsampling is performed by instance segmentation algorithm, while **Adaptive** mode refers to downsampling is executed by hardware-based algorithm or instance segmentation algorithm based on image resolution, following the principle of optimal efficiency.

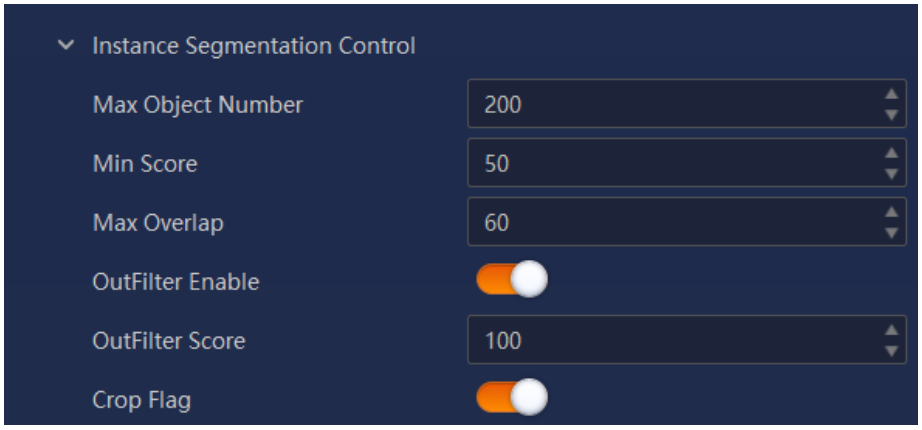

Figure 9-5 Instance Segmentation Algorithm Parameters

Note

- The specific parameters may differ by device models.
- Some parameters can be set in **All Features** → **Algorithm Control** → **Instance Segmentation Control**, and the management mode is set to **Developer**.

9.4 Set Depth Algorithm Parameters

You should set depth algorithm parameters via **Depth Param Control**, as shown below.

- **Depth Threshold**: It filters the part of the depth image that exceeds the threshold and only outputs the data within the threshold range. If the distance between the measured object and the device exceeds this threshold, the output data is 0. The unit of this parameter is mm.
- **Deep Match Mode**: It includes fast, precision and balance mode.
  - The **Fast** mode reduces completeness and precision of the depth image, and frame rate of depth image is 18 fps.
  - The **Precision** mode considers both completeness and precision of the depth image, and frame rate of depth image is 9 fps. For package with strong absorbance or reflection, it is recommended to use this mode.

- The **Balance** mode reduces completeness of the depth image, and frame rate of depth image is 16 fps.

- **Deep Far Mode**: It includes Near_Mode and Far_Mode.
  - In **Near_Mode**, the minimum working distance is the nominal clearance distance of the device.
  - In **Far_Mode**, the minimum working distance is equal to the nominal clearance distance of the device multiplied by 2, and the frame rate will be increased (non-high precision mode).
- **Subpixel Switch**: After it is enabled, you can set **Subpixel Ratio** to perform subpixel correction for depth image. The higher the value, the more holes are detected. For depth images capturing box side and shadowed area, the appropriate **Subpixel Ratio** can effectively filter out depth information of side surface or shadowed area.
- **Single Fuse Switch**: After it is enabled, this function can perform edge correction on existing binocular disparity images based on monocular disparity images.

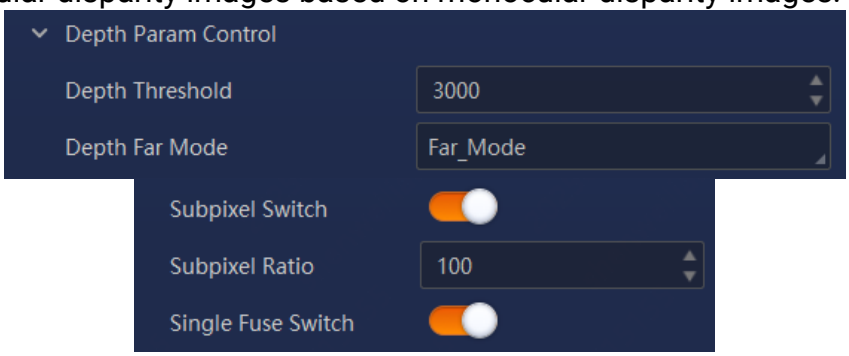

Figure 9-6 Depth Algorithm Parameters

Note

- The specific parameters may differ by device models.
- Some parameters can be set in **All Features** → **Algorithm Control** → **Depth Param Control**, and the management mode is set to **Developer**.

9.5 Set Package Detection Algorithm Parameters

You should set package detection algorithm parameters via **Package Detect Control** that is applied to the grasp working mode.

The device supports setting min. height threshold to limit the min. point cloud height for instance segmentation or non-instance segmentation result, and point clouds that are smaller than this height are filtered. The specific parameters are as follows:

- **Min. Height Low Threshold**: It sets the min. height low threshold, that is, the min. point cloud height for instance segmentation.
- **Min. Height High Threshold**: It sets the min. height high threshold, that is, the min. point cloud height for non-instance segmentation.

The device supports setting super voxel size for point cloud segmentation. It sets the size

of a single super voxel for point cloud segmentation in grasp working mode, that is, the min. unit for point cloud segmentation. You can set this parameter according to the actual point cloud accuracy.

The device supports setting the point cloud threshold of the instance segmentation result and non-instance segmentation result to limit the shape of package surface and determine whether it belongs to the same one. The larger the threshold, the smaller the limit.

- **High Concave Tolerance**: It is a relaxed concave threshold for segmenting point clouds of instance segmentation results.
- **High Convex Tolerance**: It is a relaxed convex threshold for segmenting point clouds of instance segmentation results.
- **Low Concave Tolerance**: It is a strict concave threshold for segmenting point clouds that are not instance segmentation results.
- **Low Convex Tolerance**: It is a strict convex threshold for segmenting point clouds that are not instance segmentation results.

The device supports configuring related thresholds regarding concavo-convex packages to have accurate segmentation.

- **Contour Ratio Threshold**: It is the concave degree threshold of convex packages. The larger the value is, the easier it is to be divided into multiple small convex packages.
- **Pkg Conv Dist**: It judges whether the package belongs to flat one or concavo-convex one. The smaller the value is, the easier it is to be judged as concavo-convex packages.

9.6 Set Grasp Algorithm Parameters

You should set grasp algorithm parameters via **Grasp Param Control** that is applied to the grasp working mode.

Table 9-2 Grasp Algorithm Parameters

Parameters	Description
Grasp Analysis Enable	If it is enabled, the device can directly output grasp point information.
Grasp Timeout (ms)	It sets grasp timeout, and the unit is ms.
Move Check Enable	If it is enabled, grasp will not be performed if there is a moving object.
Move Check ROI Select	It selects ROI that needs motion detection, including **Detect ROI** and **Grasp ROI**.
Eular Angle Type	It sets the eular angle type, including ZYX, XYZ, Rodrigues and ZYZ. ● ZYX: The eular angle rotates round Z, Y and X-axis in turn. ● XYZ: The eular angle rotates round X, Y and Z-axis in turn. ● Rodrigues: The eular angle rotates in accordance with Rodrigues.

	● ZYZ: The eular angle rotates round Z, Y and Z-axis in turn.
Valid Cap Pos Number	It limits the number of valid grasp postures that can be output.
No Instance Pos Enable	If it is enabled, non-instance segmentation results can be output.
Height Compare Tolerance	When sorting the grasp points, compare the tolerance of the height of adjacent packages that are consistent with each other, and packages with a height within this range will be detected. The larger the value, the more adjacent packages are detected.
Robot Uplift Height	It indicates the lifting height of the mechanical arm when grasping, which is used for obstacle avoidance analysis of the grasping sequence. The larger the value, the higher the lifting height of the robotic arm.

The device supports setting the size of the grasped package, the min. size of the package on the edge, and the threshold of the overlap ratio between the package and the suction nozzle. If it is lower than any of the following parameters, it will not be grasped. The specific parameters are as follows:

- **Pkg Min. Width**: It sets the min. package width, which is the short side of the package.
- **Pkg Min Length**: It sets the min. package length, which is the long side of the package.
- **Pkg Sucker Overlap Threshold**: It sets the threshold of the overlap ratio between the package and the suction nozzle.
- **Edge Pkg Min. Size**: It sets the min. dimension of limiting package on the edge, which is the short side of the package.

During the grasp process, you can set the relevant parameters to adjust the expansion range of the suction cup and the distance of the compressed package to prevent the collision of the suction nozzle. It also can limit the degree of compression of the package that can be grasped by the edge, and the angle between the package plane and the vertical upward direction of the workbench. The relevant parameters are as follows:

- **No Cap Pkg Extend**: It is used to extend the diagonal length of the suction nozzle model.
- **Suppress Strict Dist Threshold**: It is the threshold of the tight distance of the compressed package, which limits the degree of compression of the grasping suction nozzle plane and the package plane. This threshold is a strict threshold, and the smaller the threshold, the stricter the restriction.
- **Suppress Loose Dist Threshold**: It is the slack distance threshold of the compression package, which limits the degree of compression of the non-grasping nozzle plane and the package plane. This threshold is a loose threshold, and the smaller the threshold, the stricter the restriction.
- **No Cap Pkg Extend Sec**: The card package determines the secondary expansion range of the suction cup, which is generally larger than the primary expansion.
- **Suppress Strict High Dist Threshold**: The tight high distance threshold of the compression package, which limits the degree of compression of the grasping nozzle plane and the package plane used for the secondary expansion of the grasping nozzle. This threshold is a strict threshold, and the smaller the threshold, the stricter the restriction.

- **Suppress Loose High Dist Threshold**: The loose high distance threshold of the compression package, which limits the degree of compression of the non-grasping nozzle plane and the package plane used for the secondary expansion of the grasping nozzle. This threshold is a loose threshold, and the smaller the threshold, the stricter the restriction.
- **Pkg Work Angle Threshold**: It is the threshold of the angle between the package and the workbench in grasp mode, that is, the limit of the angle between the package plane and the workbench in the vertical upward direction. The larger the threshold, the looser the angle limit.

The device can take into account factors such as height, size, angle, rectangle, and adjacent relation when evaluating and sorting packages. The specific parameters are as follows:

- **Score Height Weight**: It scores and calculates height weight.
- **Score Size Weight**: It scores and calculates size weight.
- **Score Angle Weight**: It scores and calculates angle (the vertical upward angle between the package and the workbench) weight.
- **Score Rectangle Weight**: It scores and calculates the rectangle (that is the package area) weight.
- **Neighbor Select Enable**: It scores and calculates neighborhood.

The device can determine whether the grasp points of the previous and later frames are the same ones, and limit the number of grasps at the same grasp point, so as to avoid the same package being grasped all the time if the grasp fails. The specific parameters are as follows

- **Filter Pos Dist Threshold**: It is the filter fluctuation threshold. If the distance between output grasp points of the previous and later frames is less than this threshold, it is judged as the same grasp point.
- **Filter Pos Frequency Threshold**: The filter frequency threshold to limit the number of grasps at the same grasp point. For example, if it is set to 1, it will try to grasp at most 2 times, and so on.

The device also supports configuring following parameters used for result segmentation and package tracking.

- **Cvx Hull Simplify Num**: It indicates the max. number of points in the convex package set of the output target segmentation result.
- **Edge Class Output Enable**: It indicates whether to output small objects on the edge. If enabled, it will output objects with smaller edges. If it is not enabled, only complete detected objects will be output.
- **Pkg Track Overlap**: It indicates the overlap rate threshold when the package is successfully tracked. The larger the value is, the higher the requirement for successful tracking.
- **Eliminate Pkg Ratio**: It indicates the ratio of the remaining package area in the elimination area. The software obtains this parameter to feed packages or eliminate them.

Note

The specific parameters may differ by device models.

9.7 Set Post Processing Algorithm Parameters

You can set post processing parameters to improve the quality of the depth image.

Note

When multiple functions are enabled at the same time, they will be executed in the order in which the functions are displayed on the interface.

9.7.1 Set Noise Filter

When the device acquires the data, noise points generated by reflection appear in some small areas. The noise filter function can remove a small part of the isolated points whose length and width are less than the set threshold.

Table 9-3 Noise Filter Parameters

Parameters	Description
Noise Filter Enable	If it is enabled, the device will execute the noise filter function.
Noise Filter Type	You can select **DomainFilter** or **SpeckleFilter**. **DomainFilter**: The valid point areas are counted within the domain, without considering depth difference in the valid point areas. **SpeckleFilter**: The domain are constructed based on the depth difference. It is recommended to select this type when the surrounding non-empty domain should be removed.
Noise Filter Width	It refers to the continuous width of non-empty point in the X-direction. The isolated points greater than the value will not be filtered, and those less than the value set to empty points. The unit is pixels. This parameter is valid when **DomainFilter** is selected.
Noise Filter Height	It refers to the continuous height of non-empty point in the Y-direction. The isolated points greater than the value will not be filtered, and those less than the value set to empty points. The unit is pixels. This parameter is valid when **DomainFilter** is selected.
Noise Filter Speckle Depth Diff	It refers to the depth difference of adjacent points. The points whose depth difference less than the value belong to the same domain. This parameter is valid when **SpeckleFilter** is selected.
Noise Filter Speckle Area	It refers to the threshold of pixel area. The domain whose

	area less than the value will be removed. This parameter is valid when **SpeckleFilter** is selected.

Figure 9-7 Noise Filter Parameters

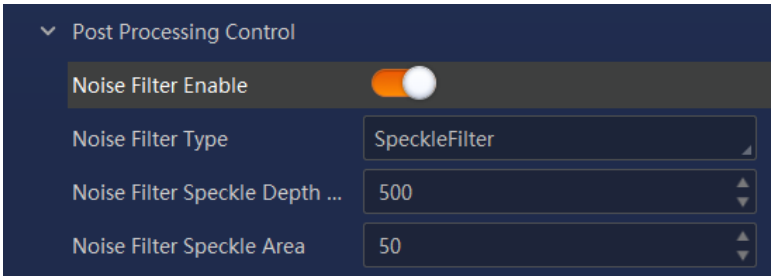

Figure 9-8 Noise Filter Parameters

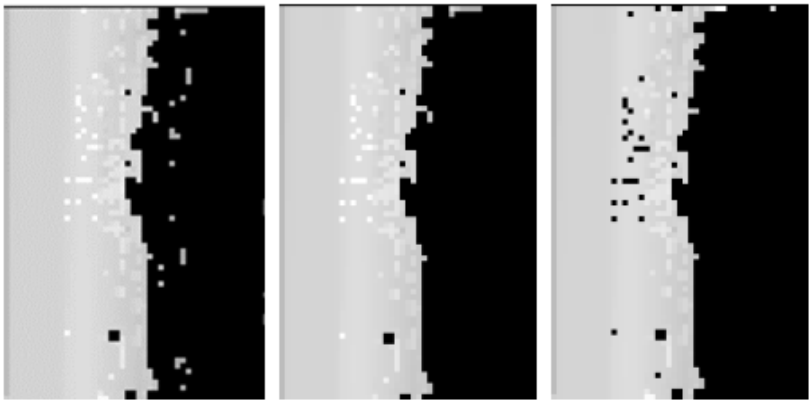

Before Filtering Domain Filtering Speckle Filtering

Figure 9-9 Noise Filter Effect

9.7.2 Set Normal Filter

The normal filter function can remove inclined planes that have too large angle with the Z-axis in the depth image, due to poor depth image quality or that is not needed in the application (affecting segmentation, etc.). This function calculates the angle between the normal vector and the Z-axis for each valid point in the depth image. If the angle is larger than the set value, the point is set as invalid.

Table 9-4 Normal Filter Parameters

Parameters	Description
Normal Filter Enable	If it is enabled, the device will execute the normal filter function.
Normal Filter Window Width	● It refers to the size of the window used to calculate the normal vector of input depth image. ● The smaller the window is, the better it can reflect the real shape around the point, and it is also more vulnerable to noise. ● The larger the window is, the less it will be affected by noise, and it is also more likely to cause distortion.
Normal Filter Morph Size	It refers to the size of the window for normal vector filtering mask morphological processing, and 0 means off. During the process of normal vector filtering, this function can remove the holes in the depth image. The larger the window is, the larger the area of the holes that can be removed will be.
Normal Filter Zangle Type	You can select the method for calculating the angle between the normal vector and the Z-axis. ● X Direction: Use the angle in X-direction. ● Y Direction: Use the angle in Y-direction. ● XY Direction: Use the angle in X and Y directions (recommended).
Normal Filter Zangle Ther	It refers to the threshold to determine whether to filter the point's angle between the normal vector and the Z-axis. If the angle is greater than the threshold, the point will be removed.
Normal Filte Comp Type	It sets the type of normal filter. ● Greater Than: Points where angle (between normal vector and the Z-axis) is greater than **Normal Filter Zangle Ther** will be filtered. ● Range: Points where difference value between angle (normal vector and the Z-axis) and **Normal Filter Zangle Ther** is in the range of **Normal Filte Angle ERR** will be filtered.
Normal Filte Angle ERR	It refers to the error range between angle (normal vector and the Z-axis) and **Normal Filter Zangle Ther**. Points within this range will be filtered. **Note** This parameter is valid only when **Range** is selected as **Normal Filte Comp Type**.

Figure 9-10 Normal Filter Parameters

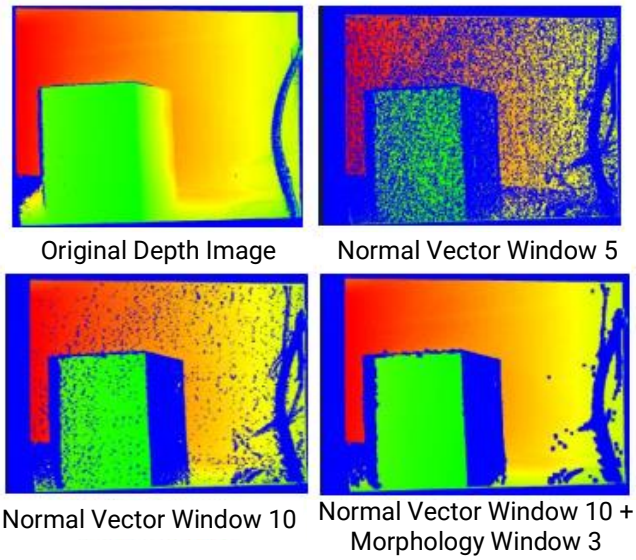

Figure 9-11 Normal Filter Effect

9.7.3 Set Extension

The extension function can expand data to fill invalid areas in depth image.

Table 9-5 Extension Parameters

Parameters	Description
Exten Enable	If it is enabled, the device will execute the extension function.
Exten Point Num	It refers to the maximum number of pixels to be filled during extension.
Exten Mode	It includes **Smooth** mode and **Textured** mode. ● **Smooth**: This mode provides a smoother filling result with faster process speed, but at the cost of detail loss. It includes **Smooth X**, **Smooth Y**, and **Smooth XY**. ● **Textured**: This mode achieves more details, but operates at

	lower speed. It includes **Textured X** only.

Figure 9-12 Extension Parameters

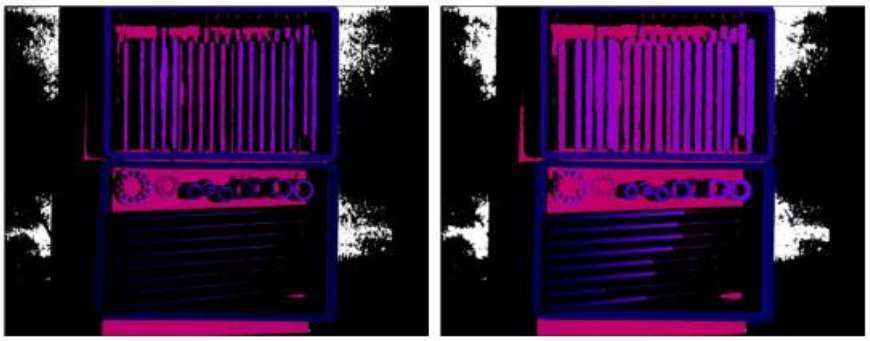

Figure 9-13 Extension Effect

9.7.4 Set Gap Filling

The gap filling function counts the holes in the X and Y directions on the depth image. It performs linear interpolation on the points whose continuous length is less than the set threshold and whose height difference between the non-empty points on both sides is smaller than the threshold, and fills the holes to obtain a more complete depth image.

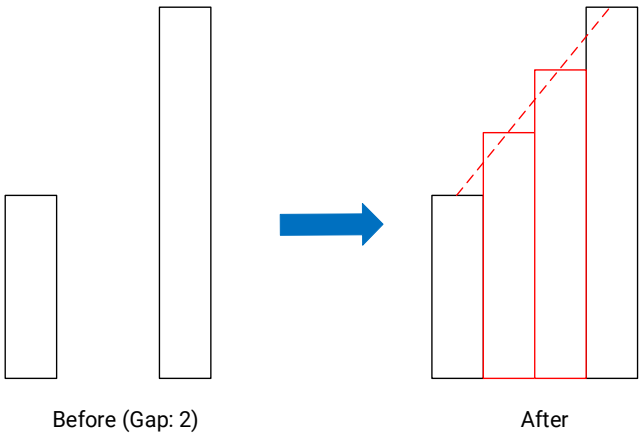

Figure 9-14 Gap Filling Principle

Table 9-6 Gap Filling Parameters

Parameters	Description
Gap Fill Enable	If it is enabled, the device will execute the gap filling function.
Gap Fill Mode	There are three options. ● X Direction: Fill the invalid points in X-direction. ● Y Direction: Fill the invalid points in Y-direction. ● XY Direction: Fill the invalid points in X and Y directions (first X-direction, then Y-direction).
Gap Fill X Num	It sets the maximum gap width for filling in the X direction. If the gap width is greater than this value, no filling will be executed.
Gap Fill Y Num	It sets the maximum gap width for filling in the Y direction. If the gap width is greater than this value, no filling will be executed.
Gap Fill Height Th	It refers to the depth value height difference between the points on both sides of the gap. If it is greater than this value, no filling will be executed. The unit is depth value.

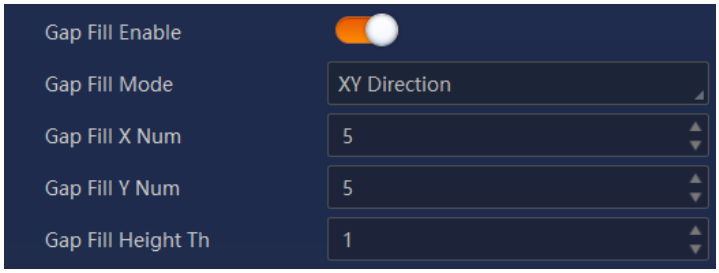

Figure 9-15 Gap Filling Parameters

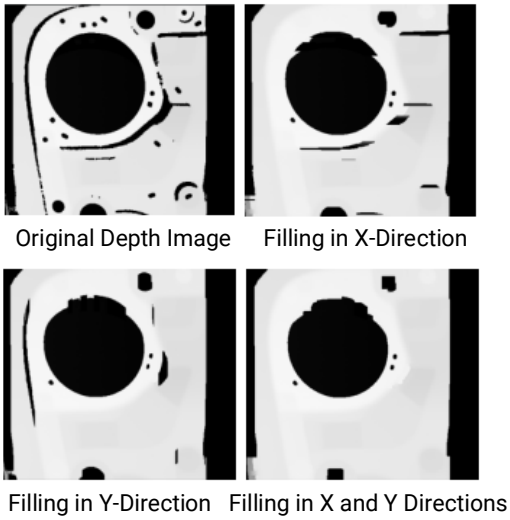

Figure 9-16 Gap Filling Effect

9.7.5 Set Range Filter

The range filter function can execute filtering for the depth image to remove noise light.

Table 9-7 Gap Filling Parameters

Parameters	Description
Range Filter Enable	If it is enabled, the device will execute the range filter function.
Range Filter Type	You can select **Gauss Filter**, **Median Filter**, **Mean Filter**, **Inverse-weighted Gauss Filter**, and **Spatial Filter**. **Note** It is recommended to select **Spatial Filter**. **Gauss Filter** and **Mean Filter** may cause distortion of depth edge, and **Median Filter** and **Spatial Filter** have a better effect on edge.
Range Filter Win Width	It refers to the window width of depth image filtering. The larger the value is, the smoother the image will be. This parameter is valid when **Gauss Filter**, **Median Filter**, **Mean Filter**, or **Inverse-weighted Gauss Filter** is selected.
Range Filter Win Height	It refers to the window height of depth image filtering. The larger the value is, the smoother the image will be. This parameter is valid when **Gauss Filter**, **Median Filter**, **Mean Filter**, or **Inverse-weighted Gauss Filter** is selected.
Range Filter Stddev	It refers to the standard deviation of spatial filter. The larger the value is, the smoother the image will be. This parameter is valid when **Spatial Filter** is selected.
Range Filter Decay	It refers to the spatial filter decay, which can affect the morphology of the filter kernel. This parameter is valid when **Spatial Filter** is selected. **Note** It is recommended to keep the default value, because this parameter may cause offset of depth value.

Figure 9-17 Range Filter Parameters

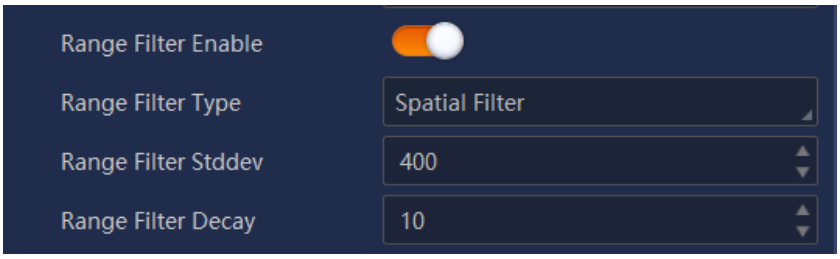

Figure 9-18 Range Filter Parameters

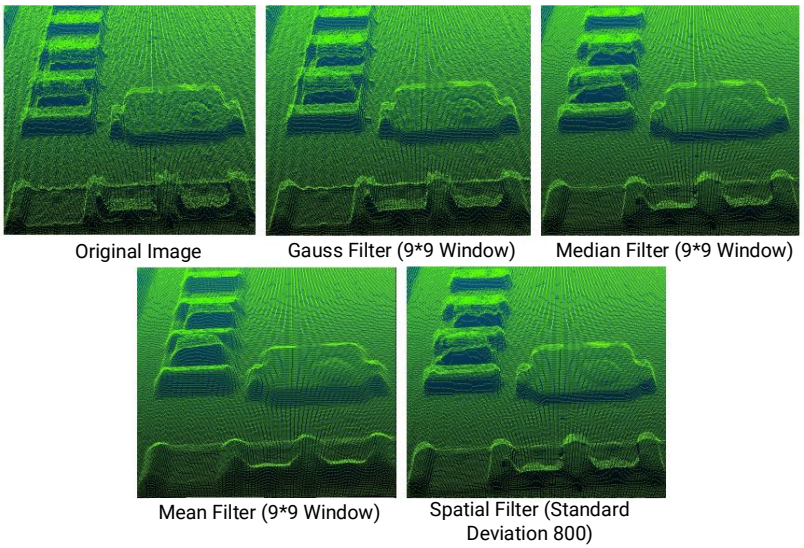

Figure 9-19 Range Filter Effect

9.7.6 Set Extraction

The extraction function can maintain the pixel points within the specified depth range, and set the points out of this range to invalid values (0).

Table 9-8 Gap Filling Parameters

Parameters	Description
Height Extract Enable	If it is enabled, the device will execute the extraction function.
Height Extract Min Depth	It refers to the minimum valid depth value.
Height Extract Max Depth	It refers to the maximum valid depth value.

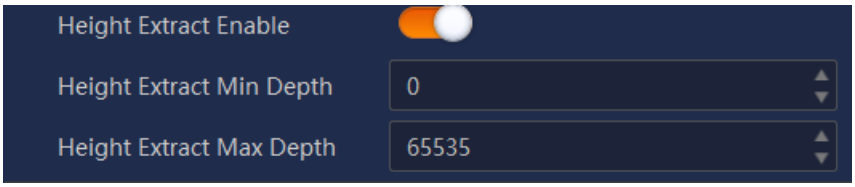

Figure 9-20 Extraction Parameters

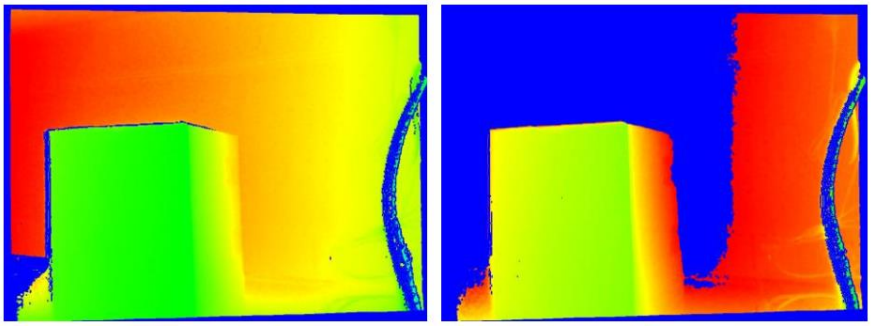

Figure 9-21 Extraction Effect

9.8 Set Range Transform Parameters

You can enable **Range Transform Enable**, and select **Rang Transform Type** (**GVertical Flip**, **Horizontal Flip**, or **XY Transposition**) to change the depth image.

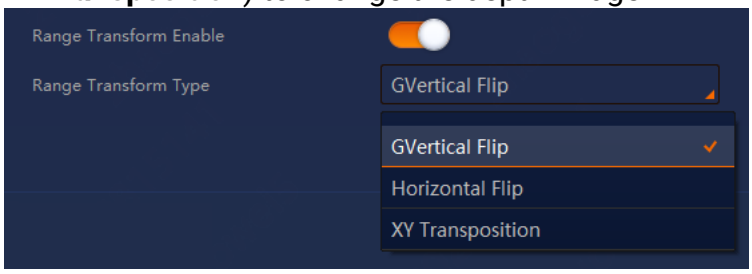

Figure 9-22 Range Transform Parameters

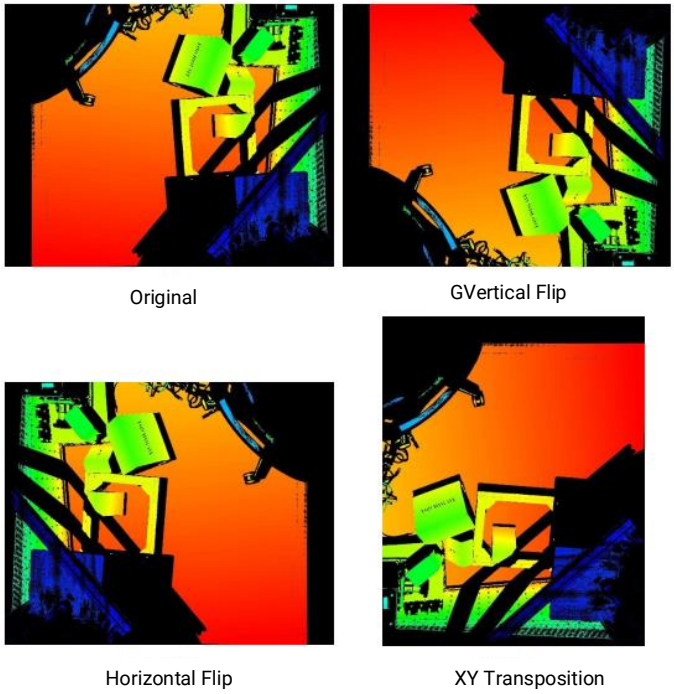

Figure 9-23 Range Transform Effect

9.9 Set Object Classification Algorithm Parameters

You can enable **Obj Classify Enable** in **Obj Classify Param Control** to classify the results of each instance segmentation.

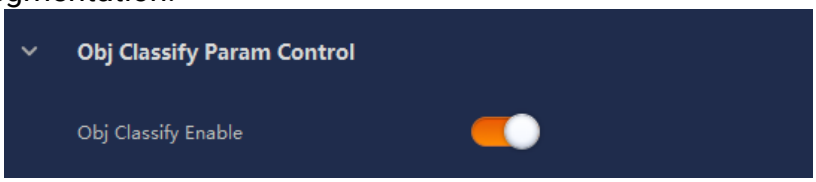

Figure 9-24 Object Classification Algorithm Parameter

Chapter 10 Other Functions

10.1 Feature Import/Export

You can import or export device features in the client software.

Export

Click to export the device feature.

Note

The Default parameters cannot be exported.

Import

Steps

1. Click in the upper-left corner of the client software.
2. Select a file in MFS format to import.

Note

The device features with the same device model and the same firmware version can be imported only.

3. If there is a difference between the current device feature and feature in MFS file, you can click **Open** to view the details.
4. Click **Import** to import the feature, or click **Cancel** to cancel importing.

10.2 File Access Control

The file access function can import or export the device's calibration files and save them in MFA format. The device's calibration files include:

- User Set: The configuration file of the selected user set.
- Device Extend Config: The ROI information file of EDP devices.
- RGBD Sensor Lut: The LUT used by the device sensor calibration for creating correction image.
- RGBD Sensor Calibrate: The sensor calibration file for saving internal parameter results.
- RGBD Singulation Calibrate: The singulation calibration file for saving system calibration results.
- RGBD Grasp Calibrate: The grasp calibration file for saving system calibration results.
- RGBD Hand-Eye Calibrate: The one-key hand-eye calibration file for saving hand-eye calibration results.

- RGBD Volume Measure Calibrate: The calibration file for volume measurement.
- Device Log File: The system log files saved in the device.
- Device Enc File: The encrypted file.
- License Notice: The license notice file.
- Feature Language Map: The mapping file of the device's features.

Steps

1. Click to open the file access dialogue box.
2. Select a device feature from the drop-down list of **Device Feature** and click **Import** or **Export**.

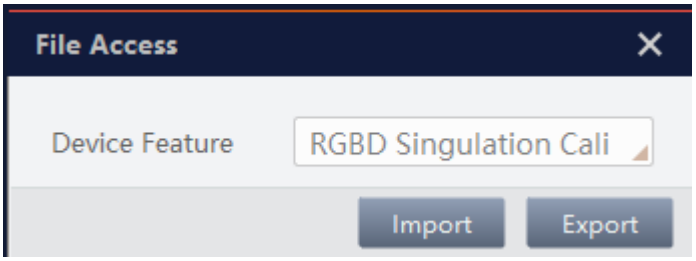

Figure 10-1 Import or Export

3. Select a file in MFA format from local PC to import, or select a saving path and enter file name to save and export.

Note

- One-key hand-eye calibration file is created by the 3D hand-eye calibration tool, and you can contact technical support to get it.
- The supported calibration files may differ by device models.
- The License Notice file can be exported only.

10.3 Deep Learning Model Management

The device has built-in deep learning algorithm that supports importing and exporting the model of deep learning. Click in the feature panel, and you can import and export two type of models, including **Instance Segment Model File** and **Object Classify Model File**.

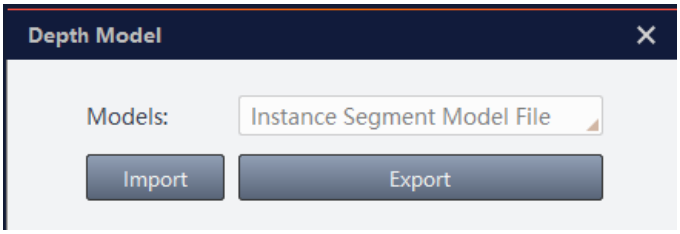

Figure 10-2 Model Operation

Note

- Restarting the device is required after importing files.
- The specific deep learning models may differ by device models.

10.4 Update Firmware

The device supports updating the firmware via the client software.

Note

- Use the firmware package of the corresponding device model for updating.
- Do not disconnect the device with PC during updating.
- The device will restart automatically after updating.

Steps

1. Run the client software, and click on the control toolbar to open the device list window.
2. Select the device that needs to be updated.

Note

Make sure that the device that needs to be updated is in available status.

3. Right click the selected device and click **Firmware Upgrade**, or click in **Version** to open the updating window.

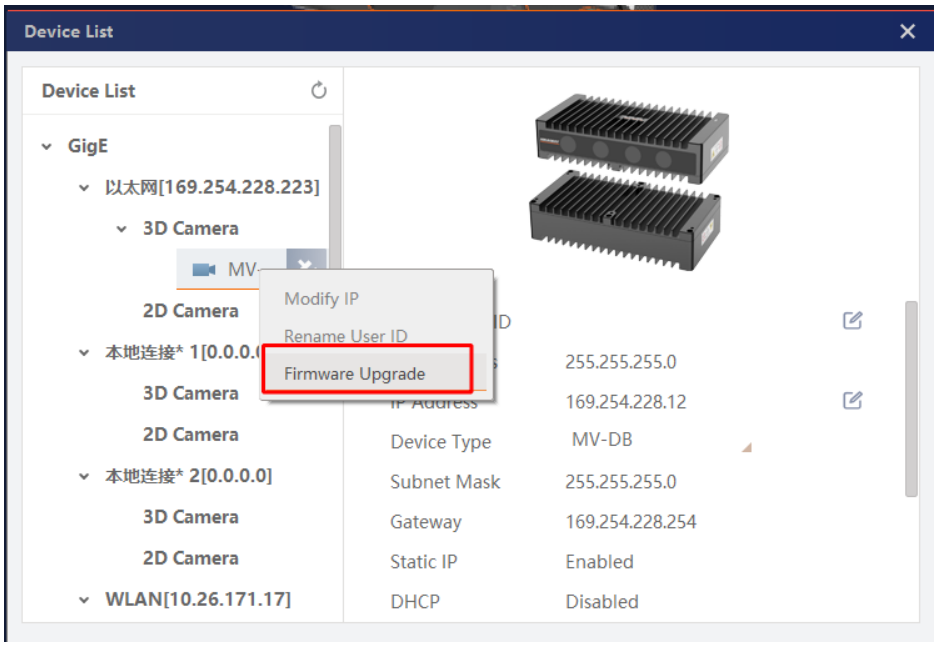

Figure 10-3 Device List Window

4. Click to select the firmware file (in DAV format), and click **Upgrade** to update the firmware.

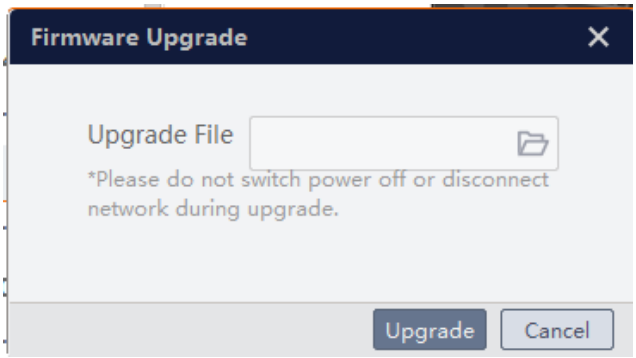

Figure 10-4 Update Firmware

Chapter 11 Device Application

Combined with RobotPilot and HiFeeder, the speckle structured light stereo camera can realize parcel grasping, singulation, and other application scenarios.

Table 11-1 Accessories

Device Model	Application Scenario
MV-DB500S-S MV-DB700S-S	Singulation
MV-DB500S-C MV-DB700S-C	Cross-belt empty detection, double-edge detection, over-edge detection, position correction
MV-DB300S-V MV-DB500S-V	Volume measurement
MV-DB500S-R	Parcel grasping, auto material loading/unloading
MV-DB05SME MV-DB12SME MV-DB500S	Offset detection, volume measurement, robotic grasping Secondary development is supported.
MV-DB1300A	Palletizing/depalletizing system

Chapter 12 FAQ (Frequently Asked Question)

12.1 Why there is no device listed after I run the client software?

Table 12-1 Question 1

Possible Cause	Solution
The device is powered off.	Check the device power connection to make sure that the device is powered up normally.
Network exception occurs.	Check the network connection to make sure that the device can be connected to the network normally. PC and the device are in the same network segment.

12.2 Why the image is very dark?

Table 12-2 Question 2

Possible Cause	Solution
The laser is not enabled.	Enable the laser.
Too small value of the exposure and gain.	Increase the exposure and gain properly.
No trigger signal though the trigger function is enabled.	Disable trigger function or output trigger signal.

12.3 Why the image quality is very poor during the live view?

Table 12-3 Question 3

Possible Cause	Solution
The network may be Fast Ethernet.	Check if the network transmission speed is 1 Gbps or not.
Packet loss occurs.	Go to **Settings** → **Resend Packet** in the menu bar of the client software, enable

Possible Cause	Solution
	Resend Packet, and increase **Max. Packet Resending Percent** and **Timeout Period** properly.

12.4 Why the posture deviation of singulation result is large?

Table 12-4 Question 4

Possible Cause	Solution
The installation position of the device may be changed.	Perform system calibration for the device again.

12.5 Why there is no depth information in depth image?

Table 12-5 Question 5

Possible Cause	Solution
For MV-DB500S device, there is no depth information in depth image when the distance between the object and the camera is less than 50 cm. The camera cannot detect the depth information.	The distance between the object and the camera needs to be greater than the clearance distance. Refer to datasheet for clearance distance.

12.6 What does depth mean in depth image?

Table 12-6 Question 6

Possible Cause	Solution
The definition of depth.	The depth refers to the vertical distance between the target and datum plane of the camera (camera's sensor).

12.7 What is the difference between exposure time and color exposure time?

Table 12-7 Question 7

Possible Cause	Solution
The difference between exposure time and color exposure time.	You can adjust the exposure time of the camera for depth image, and adjust the color exposure time of the color camera for RGB image.

Chapter 13 Revision History

Table 13-1 Revision History

Version	Revision Date	Revision Details
V3.0.0	Aug. 26, 2025	● Edit the product name. ● Add Section ***Terminology***. ● Add Section ***Operating Principle***. ● Edit Section ***Appearance***. ● Edit Section ***Power and I/O Connector***. ● Edit Section ***Installation Preparation***. ● Edit Section ***Install Device***. ● Edit Section ***Set Working Mode***. ● Edit Section ***Set Image Mode***. ● Add Section ***Set SDK Align***. ● Edit Section ***Set Instance Segmentation Algorithm Parameters***. ● Edit Section ***Set Depth Algorithm Parameters***. ● Edit Section ***Set Normal Filter***. ● Add Section ***Set Extension***. ● Add Section ***Set Range Transform Parameters***. ● Edit Chapter ***Device Application***.
V2.1.0	Dec. 25, 2024	● Edit the product name. ● Edit Section Introduction. ● Edit Section Device Model and Parameter Description. ● Edit Section Connector. ● Edit Section Installation Preparation. ● Edit Section Device Debugging. ● Edit Section Set Image Mode. ● Edit Section Set Exposure Mode. ● Edit Section Set Color Exposure Mode. ● Edit Section Set Frame Rate. ● Edit Section Enable Laser. ● Add Section Set Depth/RGB Align. ● Add Section Set JPEG Rendering. ● Edit Section Set Transport Layer Control. ● Edit Section Set Trigger Source. ● Edit Section Set Trigger Related Parameters. ● Edit Section Set Package Singulation Algorithm Parameters. ● Edit Section Set Instance Segmentation Algorithm Parameters.

Version	Revision Date	Revision Details
		● Add Section Set Post Processing Algorithm Parameters. ● Add Chapter Device Application.